Baumer
Passion for Sensors

# Ultrasonic sensors.

## Compact, multi-purpose, robust.

Edition 2013

# Easy to operate and ideal for demanding applications – ultrasonic sensors by Baumer.

# Visibly better: Baumer sensors.

The Baumer Group is leading at international level in the development and production of sensors, shaft encoders, measuring instruments as well as components for automatic image processing. As an owner-managed family business, we employ about 2500 workers worldwide in 36 subsidiaries and 18 countries. With marked customer orientation, consistently high quality and vast innovation potential worldwide, Baumer develops specific solutions for many industries and applications.

## Our standards – your benefits.

- Passion coupled with expertise – both have made us a sensor pioneer and technology leader
- Our range of services is hard to beat – we have the right product, developed by our own team, for every task
- Inspiring through innovation – a challenge Baumer employees take on every day
- Reliability, precision and quality – our customers' requirements are what drives us
- Partnership from the start – together with our customers we develop suitable solutions
- Always a step ahead – thanks to our production depth, our flexibility and our delivery reliability
- Available worldwide – Baumer is Baumer everywhere

# All-round talents.

Most ultrasonic sensors are based on the principle of measuring the propagation time of sound in air. Packages of ultrasonic sound, so-called bursts, are emitted by the sensor, reflected by an object and received again by the sensor. The integraged transducers with sonic frequencies far beyond the range of human hearing, constantly switch to and fro between emission and reception. The returned echo signals are evaluated by the integrated electronics of the sensor. Depending on the sensor type, the information is provided at the output either as digital or analog signals.

Unlike optical sensors, influences such as changing colors, transparency or high reflectivity have no bearing on the detection of objects.  Ultrasonic sensors maintain their excellence even in harsh environments. They are extremely resistant to dirt, and process reliability is not impaired by dust, smoke, vapors, or other contaminants.

The following types are available:

- Ultrasonic distance measuring sensors
- Ultrasonic proximity sensors
- Ultrasonic 2 point proximity switches
- Ultrasonic retro-reflective sensors
- Ultrasonic through beam sensors

Learn more.
Downloadable data sheets as well as further information about our products is available at:
**www.baumer.com/ultrasonic**

# Table of contents.

**Introduction**
Applications 8
Function 14
Typical sonic cone profile 15
Mounting 16
General definitions 19

**Ultrasonic distance measuring sensors**
Introduction 22
Overview 24
Rectangular designs 26
Cylindrical designs 44

**Ultrasonic proximity sensors**
Introduction 54
Overview 56
Rectangular designs 58
Cylindrical designs 69

**Ultrasonic 2 point proximity switches**
Introduction 82
Overview 83
Rectangular designs 84
Cylindrical designs 88

**Ultrasonic retro-reflective sensors**
Introduction 92
Overview 94
Rectangular designs 96
Cylindrical designs 104

**Ultrasonic through beam sensors**
Introduction 110
Rectangular designs 112

**Accessories**
Connectors 116
Connectors/Pin assignment 119
Mounting accessories 120
Mounting kits *SENSOFIX* 122

**Quick reference list**
Quick reference list A – Z 124

# Baumer – setting standards with innovations.

The success story of the Baumer Group is characterized by innovations. By hardware and software engineers, designers or process engineers who work day in and day out to make our products and systems even better.

Our particular focus is on further miniaturization, enhanced precision as well as improved measuring speed and sensor robustness. That's what our products are characterized by - and something we are proud of.

The Baumer development teams are organized in an international network and are in close contact with well-known universities, recognized research institutes and highly specialized international engineering companies. As the technological leader, Baumer always endeavors to maintain its lead over the long term and protect its numerous innovations through patents.

# Comprehensive product range

- Actuators and positioning drives
- Capacitive proximity sensors
- Conductivity sensors
- Counters
- Digital cameras
- Encoders
- Force and strain sensors
- Inductive sensors
- Level measurement
- Magnetic sensors
- Network Components
- OCR and code reader systems
- Optical inspection systems
- Photoelectric sensors
- Precision switches My-Com
- Pressure measurement
- Process analysis
- Process displays
- Resolvers
- Speed switches
- Spindle positioning systems
- Tachogenerators
- Temperature sensors
- Ultrasonic sensors
- Vision sensors

- Inductive sensors
- Capacitive sensors
- Photoelectric sensors
- Vision sensors
- Ultrasonic sensors
- Magnetic sensors
- Precision switches
  My-Com

# Passion for sensors.

Whether for object or position recognition, measuring, a miniaturized or exceptionally robust design – Baumer has the right sensor for every application. Different sensor functions in standard housings ease assembly for the user and limit the setup time to a minimum. Baumer can supply a wide range from inductive to vision sensors and advise you comprehensively.

# Customized solutions.

Our broad range of products enables us to provide the optimum solution for a large number of applications. But customers might have needs completely outside these application areas that cannot be entirely satisfied by the products currently on the market.

And this is precisely why our development engineers work closely with our customers. In searching for optimum solutions to meet these special needs, we are able to create customized solutions. Our customized solutions range from special mechanical designs to completely new sensor systems.

An innovative sensor solution can also help you gain a significant competitive advantage.

We would be happy to advise you!

# Miniature sensors – When space is scarce!

In this age of automation, Baumer ultrasonic sensors are the answer to the continuing trend towards miniaturization and higher integration.

This trend has led Baumer's small and compact ultrasonic sensors, with their hardy performance, to enjoy a major focus of interest.

There are four sensor types to provide this high performance:
- Ultrasonic proximity switches
- Ultrasonic retro-reflective sensors
- Ultrasonic through beam sensors
- Distance measuring ultrasonic sensors

Though special emphasis was placed on the miniature design, there was no compromising on the versatile application capabilities of these mighty minis:

- Distinctly narrow sonic cone profiles enable the sensors to look and measure into smallest cavities
- Minimized mutual interference of sensors installed in close proximitiy thanks to synchronized and multiplexed operation
- Some housing types are mechanically compatible with sensors using different technologies. They could be exchanged on short notice should the need arise in case of changing application conditions
- All miniature sensor variations feature Teach-in technology using a standardized Teach-in routine

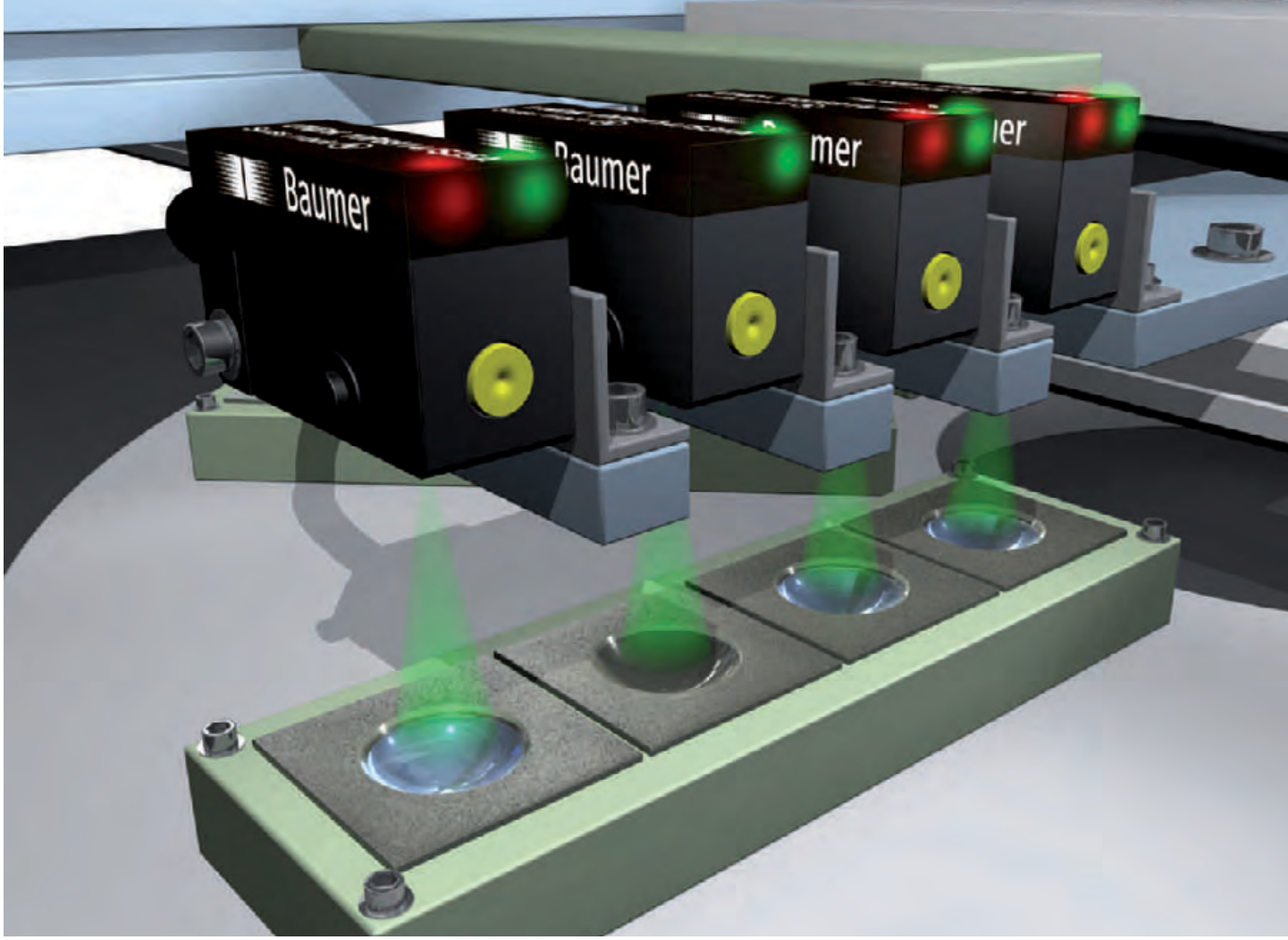


## Liquid level detection

- Miniaturized ultrasonic sensors are ideally suited to measure liquid levels in small containers. The miniature housing design allows the installation of several sensors in close proximity.

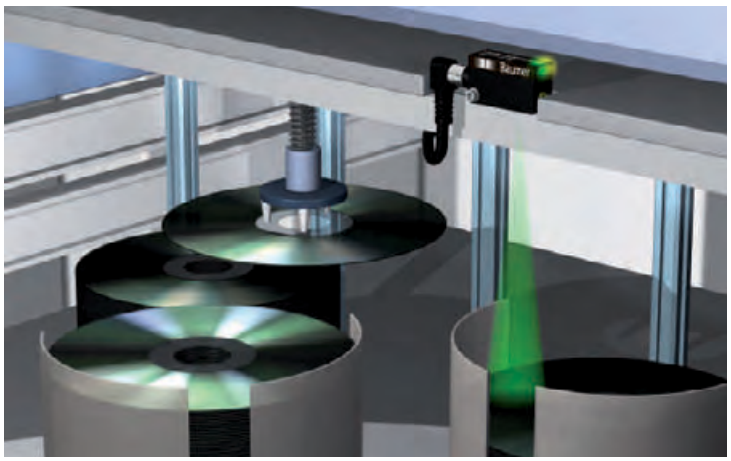

## Height measurement

- Miniature ultrasonic sensors reliably measure the distance to the object, regardless of surface color, reflectivity or transparency.

## Detection into small openings

- Sensors equipped with special beam columnators facilitate the detection of objects and liquids through very small container openings.

# Distance measuring sensors – Detecting more!

Ultrasonic distance measuring sensors provide information on an absolute position of a target or moving object. For glossy surfaces, transparent objects or in environments with a high degree of dust and humidity, ultrasonic technologies are often the only alternative to mechanical probing.

Applications for ultrasonic distance measuring sensors include level detection, stack height control as well as absolute position feedback.

Baumer offers a broad selection of ultrasonic distance measuring sensors:

- Sensing distance up to 2500 mm
- High resolution up to 0,1 mm
- Distinctly narrow sonic cone profiles enable the sensors to look and measure into cavities with a diameter of minimal 3 mm
- Available output signals 0…10 VDC and 4…20 mA or inverted from 10…0 VDC and 20…4 mA
- Output signals adjusted to required sensing distance of an object – through potentiometer, Teach-in button or remote Teach-in input

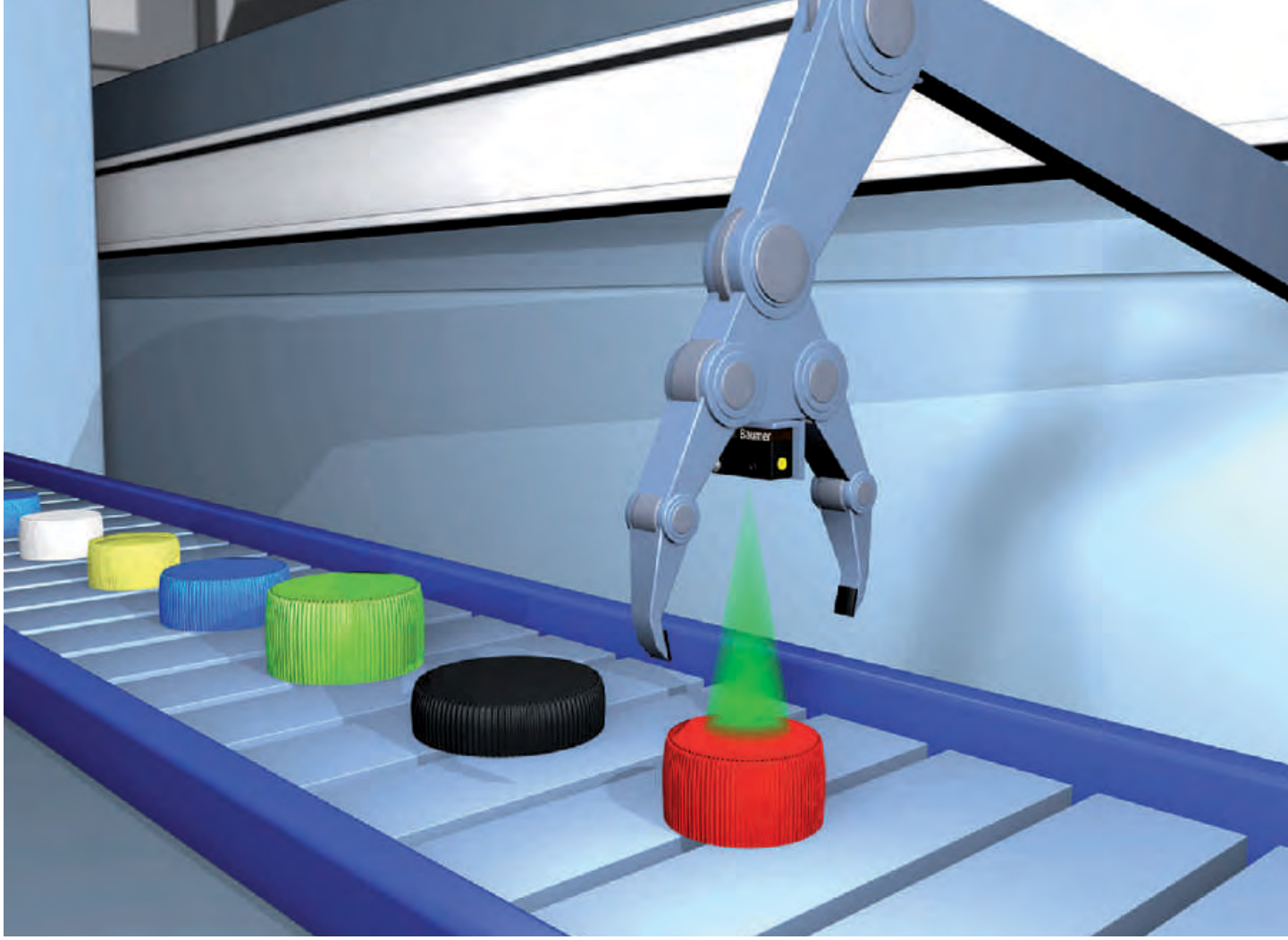

## Distance detection

- With its small shape and low weight, the miniaturized ultrasonic sensors can also be installed in small micrograppers with limited space to accomodate ultrasonic sensors.

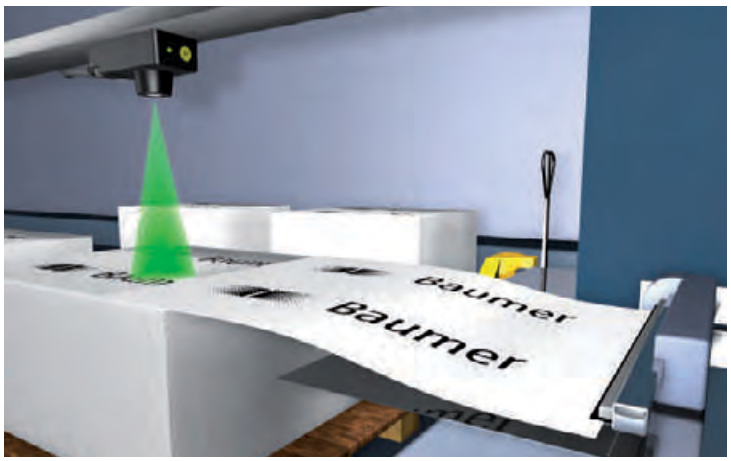


## Stacking level control

- Utrasonic sensors with analog outputs provide a distance proportional output signal highly independent of the target material encountered. The resolution is a uniform 0,3 mm even for the maximum scanning range of 2000 mm.

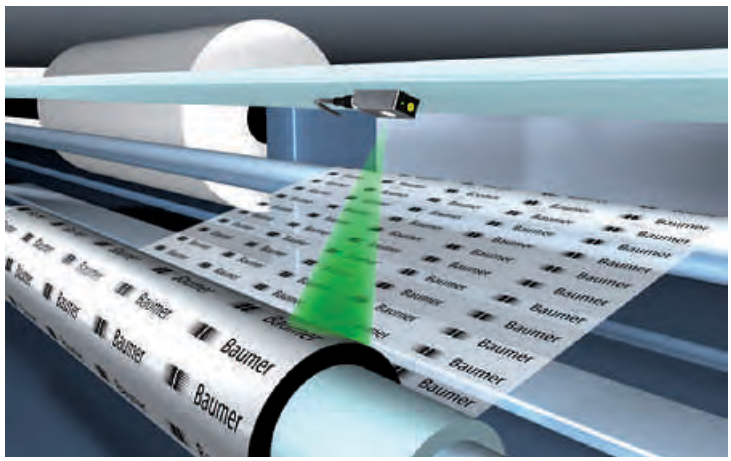


## Determination of roll diameter

- In winding and unwinding operations distance measuring ultrasonic sensors accurately measure the outer diameter of rolls containing materials such as plastic films, sheet metal, paper and cardboard, veneer etc.

# Through beam and retro-reflective sensors

For the detection of sound absorbing or fast moving objects the range of ultrasonic barriers is perfectly featured. Used for counting or the detection of a jam on conveyor belts, these sensors allow the recognition of objects which could not even be detected by simple ultrasonic proximity or optical sensors.

Through beam sensors, often used for the rupture control of paper, fabric, metal- or plastic films are capable to detect even high transparent objects.

In front of a reference surface, retro reflective sensors recognize all kinds of objects reliably, no matter if sound absorbing or sound dispersing.

Baumer ultrasonic sensors excel with following features:

- No blind range in front of the active sensing face
- Sensing range up to 3000 mm
- Short response time of less than 5 ms
- Any kind of sound reflecting material can be used as reference surface (retro-reflective sensors)

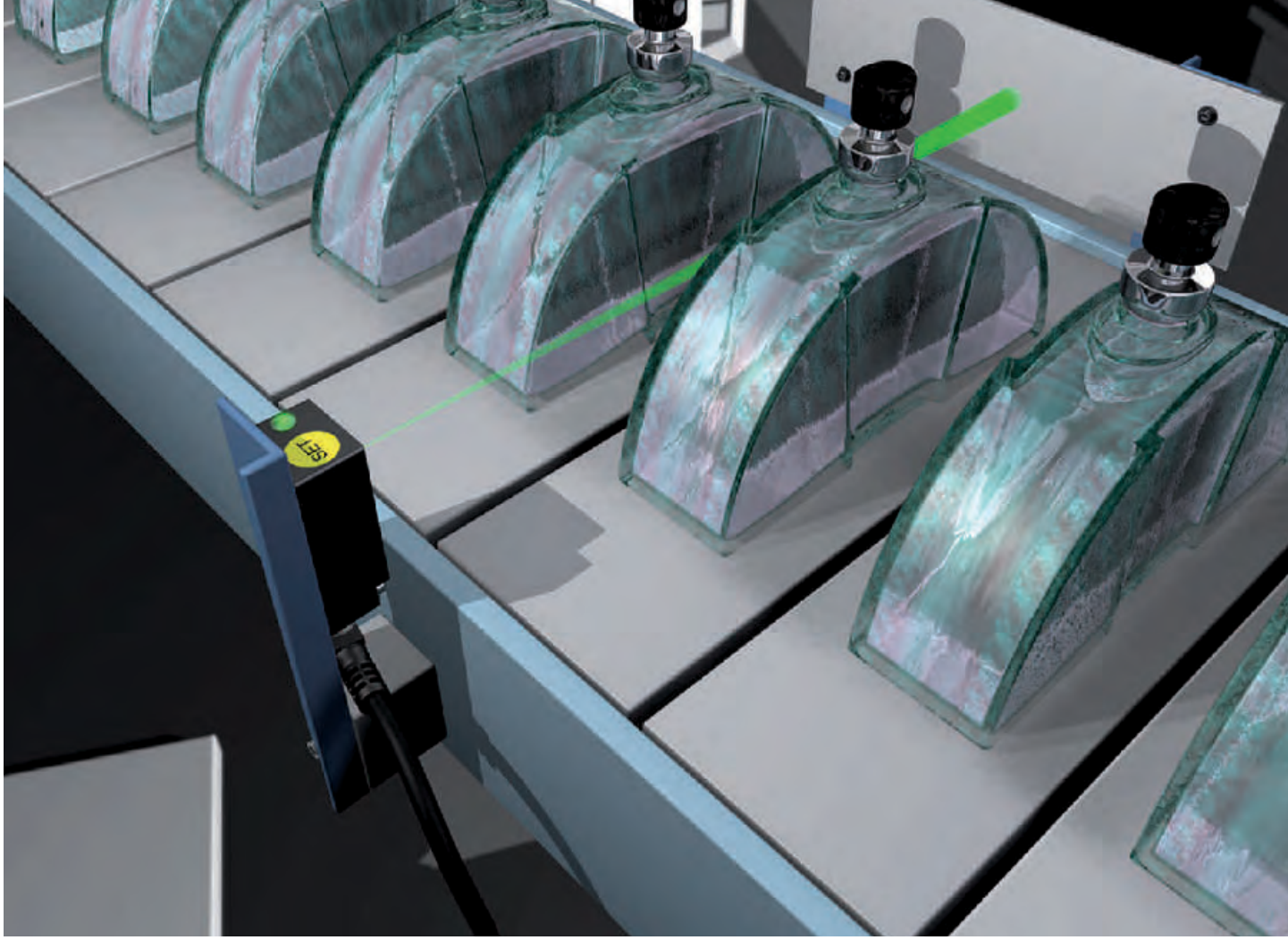


## Retro-reflective sensors

- Retro-reflective sensors require a fixed reflector or reference target for operation.

They are ideally suited to reliably detect:

- odd shaped and non-aligned objects
- sound deflecting targets
- sound absorbing materials like cottonwool and foam rubber

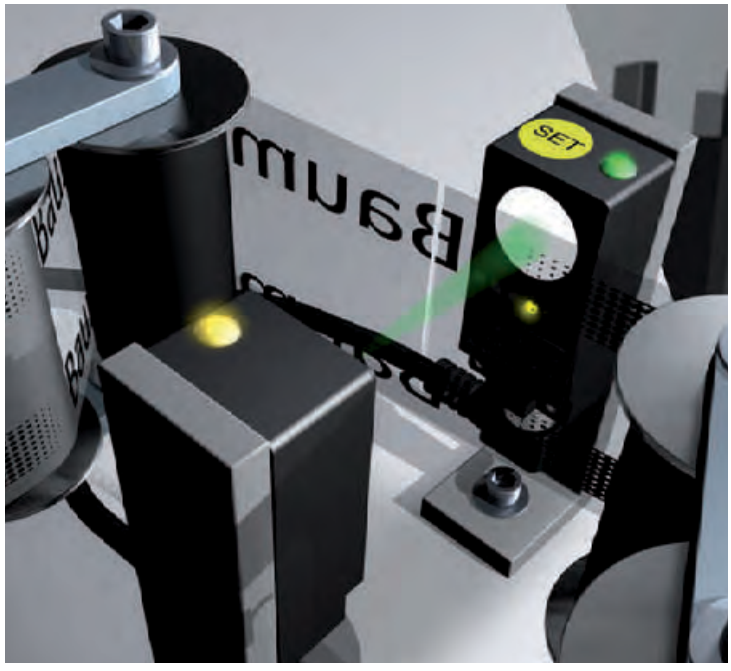


## Through beam sensors

- Due to their non-pulsed operation, through beam sensors, consisting of emitter and receiver, exhibit the fastest response time of all ultrasonic sensors.

Applications include:

- detection of objects following each other in quick succession
- counting of objects made of materials which are difficult to detect (glass jars, PET bottles)
- monitoring transparent materials like plastic and glass
- film rupture control

# Function

## Design and operation

A special sonic transducer is used for the ultrasonic proximity sensors, which allows for alternate transmission and reception of sound waves. The sonic waves emitted by the transducer are reflected by an object and received back in the transducer. After having emitted the sound waves, the ultrasonic sensor will switch to receive mode. The time elapsed between emitting and receiving is proportional to the distance of the object from the sensor.

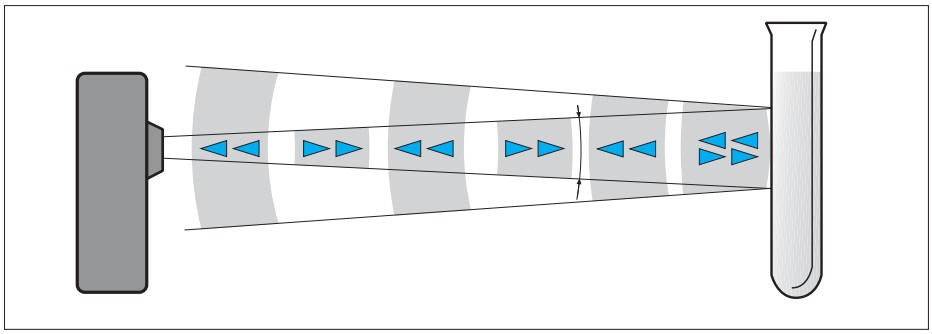

### Digital output

Sensing is only possible within the detection area. The required sensing range can be adjusted with the sensor's potentiometer or by electronic Teach-in (Teach-in button or remote Teach-in). If an object is detected within the set area, the output will change state which is visualized by the integrated LED.

## Target detection

Sonic waves are best reflected from hard surfaces. Targets may be solids, liquids, granules or powders. In general, ultrasonic sensors are deployed for object detection where optical principles would lack reliability.

### Standard target

The standard target is defined as a square flat object of following sizes:

- 15 x 15 mm for Sde up to 250 mm
- 30 x 30 mm for Sde up to 1000 mm
- 100 x 100 mm for Sde > 1000 mm

The target should be mounted perpendicular to the axis of the sensor.

### Size

To ensure a reliable object detection, the reflected signal must be large enough. The intensity of the signal depends on the size of the object. Using a standard object, the full scanning distance Sd is available.

### Surfaces

Detection of sound absorbent materials will result in a reduction of the maximum sensing distance.

The maximum sensing distance can be achieved as long as the maximum roughness of the object does not exceed 0,2 mm.

Typical sound absorbing materials are:

- foam rubber
- cotton / wool / cloth / felt
- very porous materials

# Typical sonic cone profile

## Sonic cone profiles

The sonic cone profile charts as found in the spec sheets of this catalog represent the active sensing areas for ultrasonic sensors. The charts demonstrate the short-range sonic side lobes, which widen the sensor's close-range aperture angle. Due to sound absorption and air diffusion, the lobes decrease at longer ranges.

Size, shape, surface properties and the direction of target detection have very high influence on the lateral detecting region of an ultrasonic sensor.

Sonic cone profiles apply to the whole product family, e.g. a 100 - 1000 mm profile is representative for all related sensors of the same sensing range - digital or analog outputs, etc.

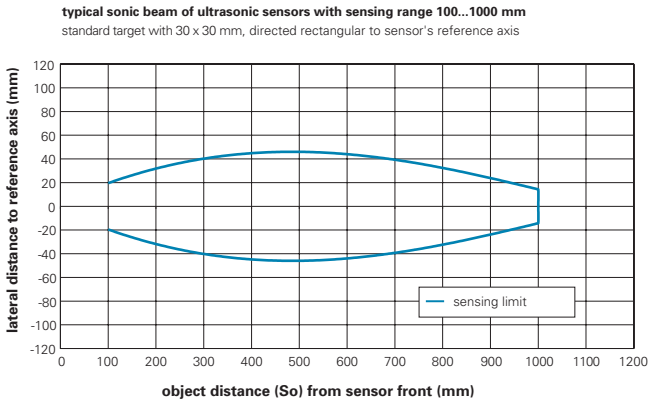


## Measuring method

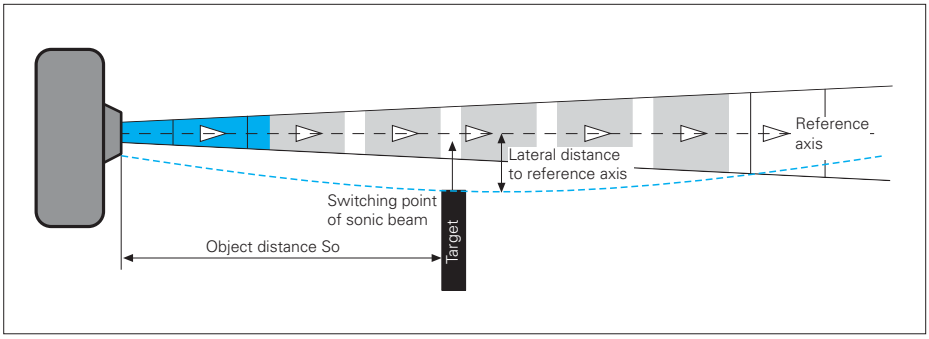


Standard square targets made of steel are used to determine the shape of typical sonic cone profiles.

- 15 x 15 mm for Sde up to 250 mm
- 30 x 30 mm for Sde up to 1000 mm
- 100 x 100 mm for Sde > 1000 mm

The targets are positioned perpendicularly to the sensor's reference axis, approached sideways at different distances. The sonic cone profile is then plotted by connecting the measured points with a line.

The cone shape can vary if round or differently shaped objects are detected.

## Minimum spacings

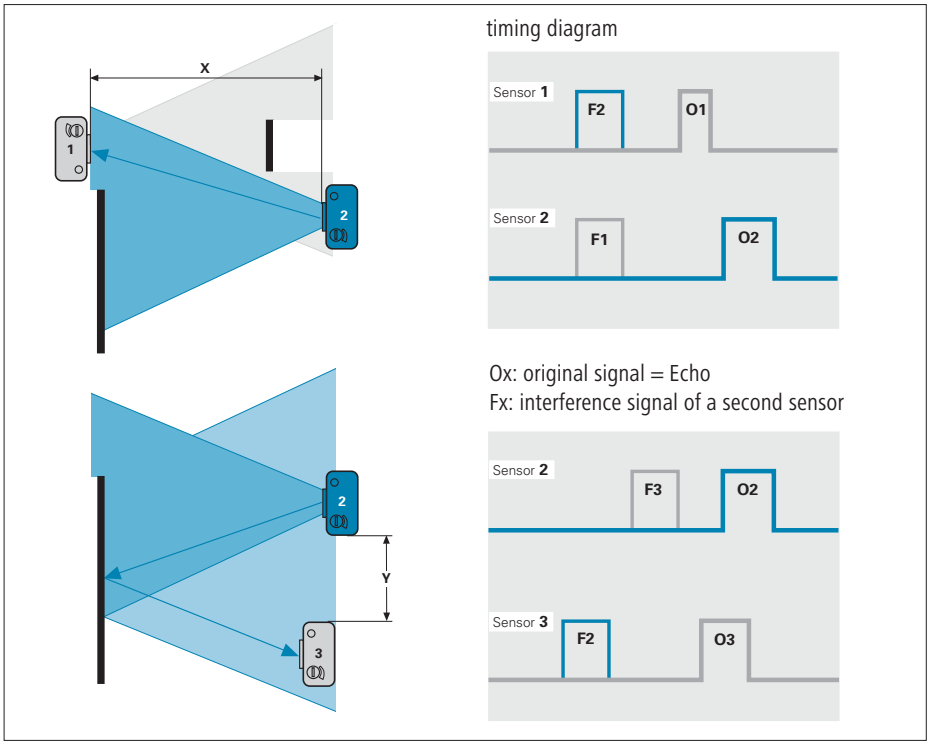


### Minimum spacings table

| Sensor type | x | y | max. no. of sensors | Action to take | Order reference | max. control wire | Response time |
|---|---|---|---|---|---|---|---|
| Standard - without multiplex or synch. | 3 x Sd | 2 x Sd | no limit | none | all standard sensors | - | according to technical specs. |
| with multiplex feature | 2 x Sd | no space required | 2 | connect control pin | Uxxx xxxx8xx | 5 m | 2 x technical specs. |
| with synchronization feature | 3 x Sd | 1 x Sd | 8 | connect control pin | Uxxx xxxx7xx | 7 m | according to technical specs. |

## Synchronization or Multiplex feature

### Synchronization feature

Link the control pin of all sensors within a limited area to each other. This triggers the measurement of all sensors at the same time. Interference signals which arrive later at the sensor due to their longer sensing distance, will be ignored. Up to eight sensors can be synchronized via control pin.

### Multiplex feature

Link the control pin of both sensors to each other. While the first sensor is measuring, the second is disabled. After the first measurement is completed, the second sensor is allowed to send and receive its signals. In maximum two sensors can be interconnected. The multiplex function increases the sensor response time to the double of the specified value.

Note: The control pin must be closed on sensors utilizing either the synchronization or multiplex feature. If the feature is not in use the pin must be connected to the following potentials to ensure the standard response time:

Synchronization: Connect the control pin to supply voltage (+Vs)

Multiplex: Connect the control pin to ground (GND)

## Adjustment aid

The LED indicates the intensity of the signal which has been reflected by the object, as well as the output's switching state.

### LED on

The object is reliably detected with a signal strength reserve of 50 %. The output is switched.

### LED off

No target detected, output is not switched.

### LED flashing

Unreliable detection of the target. The output is activated / switched.

## Teach-in lock

The Teach-in lock is active 5 minutes after power-up or after the end of the last Teach-in process. Teach-in lock is reset by disconnecting the power supply.

The Teach-in lock can be released by briefly switching the main power off.

## Angular deflection

Like light waves, a flat even surface will reflect sound waves best - reason why an angled surface might not suffice for accurate target recognition.

The larger the distance between sensor and target, the higher the tilt effect.

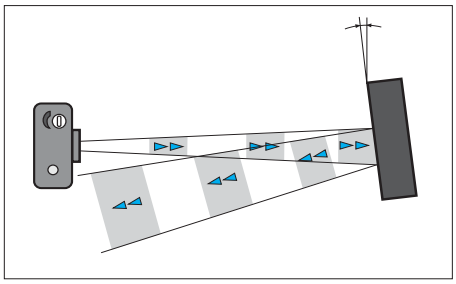

This may also be turned in an advantage when detecting a target from remote, as shown in the illustration.

The reflector must be large enough and have smooth surfaces and edges.

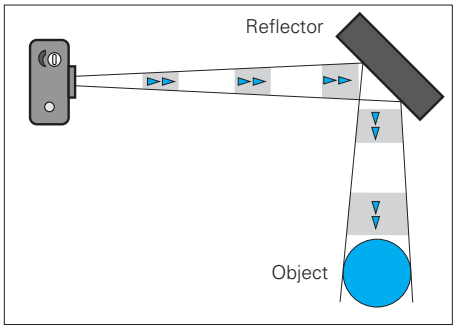


Sonic beam deflector Series 20

- see accessories section

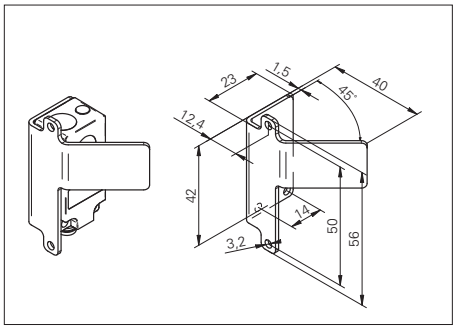

# General definitions

## Technical definitions and environmental influences

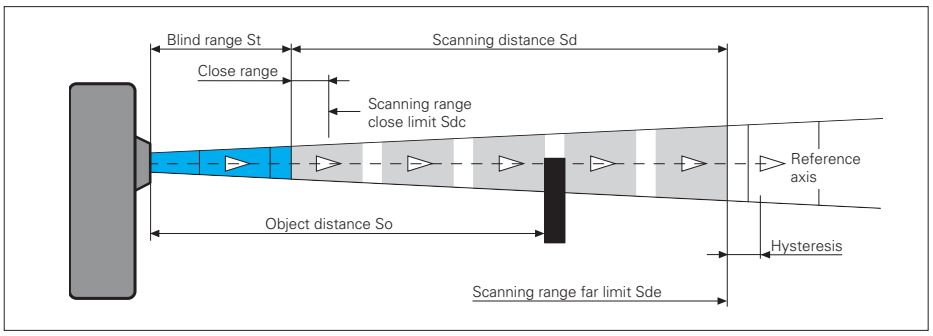


**Blind range St**

Reliable object recognition is not possible within the blind range (St). Objects within this blind range may cause false switching of the sensor.

**Scanning distance Sd**

Objects within the scanning distance (Sd) are correctly detected up to the set far limit (Sde) of the scanning distance.

**Scanning range close limit Sdc**

The close limit (Sdc) can be programmed by a Teach-in button.

**Scanning range far limit Sde**

By means of a built-in potentiometer or a Teach-in button the user can change the far limit (Sde) of the scanning distance (Sd).

**Object distance So**

The object distance is defined as the distance between the front end of the sensor and the object itself.

**Hysteresis**

After recognizing the object the effective scanning distance (Sd) is enlarged in the axial direction by the hysteresis value.

**Repeat accuracy**

Repeat accuracy is defined as the difference between two subsequent measurements under identical circumstances and with a standard object.

**Sensitivity to noise**

The extremely high sonic frequency used for ultrasonic sensors ensures that most extraneous noise will not affect operational accuracy. Pressurized air might interfere with the proper operation of the sensor under extreme conditions.

**Humidity**

A relative humidity up to 90 % has nominal effect on the sensing distance of the sonic sensors. Direct moisture or dirt however may lead to a reduction of the scanning distance Sd.

**Air stream**

The narrow sonic beam angle may be affected by strong air streams in excess of 10 m/second.

**Temperature**

Heat radiation from hot targets produces strong air turbulence. This can affect the sonic propagation and hence, the proper recognition of an object.

**Temperature drift**

The speed of sound depends on temperature. Deviation can be up to 0,18 %/K.
Temperature drift of the ambient air is mostly compensated within the sensor itself. The specification for temperature compensation is valid for stationary conditions.

# Ultrasonic distance measuring sensors

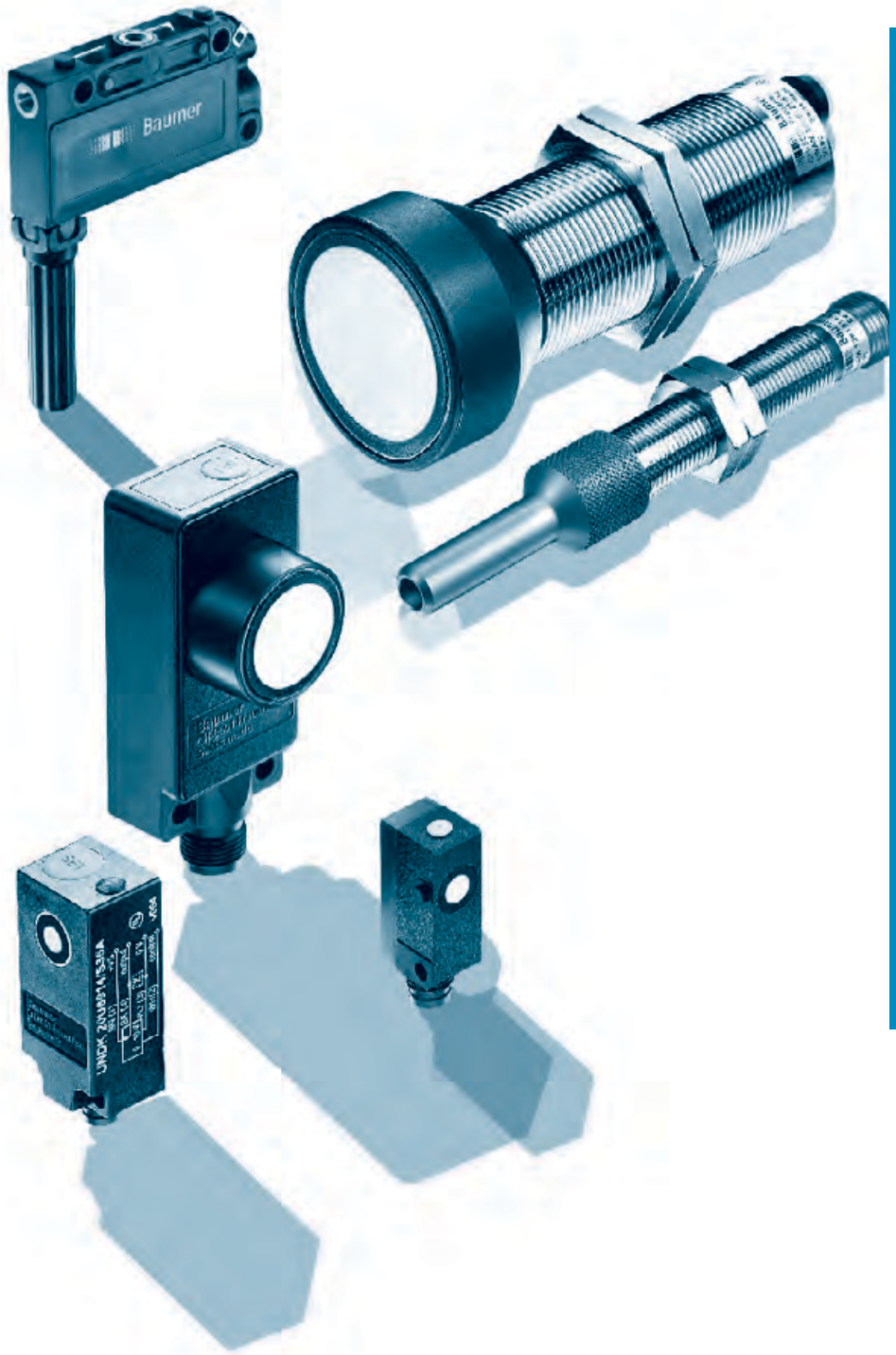



| | |
|---|---|
| Introduction | Page 22 |
| Overview | Page 24 |
| Rectangular designs | Page 26 |
| Cylindrical designs | Page 44 |

## Sensors with potentiometer

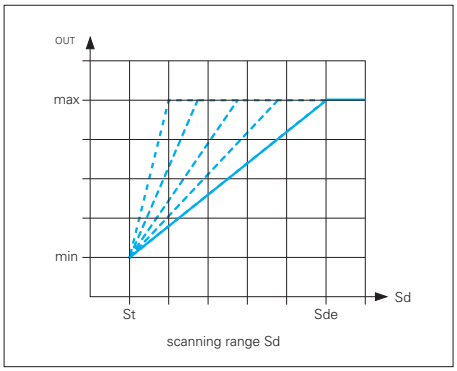


The sensor provides a distance proportional analog current or analog voltage output, allowing simply applied, non-contact distance measurement. The user can change the slope of the output curve using the built-in potentiometer. By doing so, they are able to define the required resolution. Sensor versions, which have a built-in D/A-Converter, generate output signals divided into discrete steps. Applications having long cable runs where there might be EMI or RFI interferences, should use sensors with an analog current output.

## Sensors with Teach-in

**Adjustment of 0 ... 10 V output function**

To switch the sensor into Teach mode, hold the Teach-in button for 2 seconds or more. Successful entry into Teach-mode is signaled by the flashing bicolor LED. Upon release of the Teach button the red LED will flash. Another press on the button will teach in the close limit (Sdc) which is followed by the far limit (Sde). The sensor LED lighting up for 2 seconds will confirm the completed teaching operation. At this point, you may set the close limit (Sdc) by placing the target at the required distance from the sensor (the closest the target will be to the sensor face) and briefly pushing the button or connecting the Teach-in wire with +VS. The LED will then flash Amber. Far limit (Sde) may now be programmed by placing the target at the farthest required distance from the sensor by briefly pressing the button or connecting the Teach-in wire with +VS. Both LEDs will be „on“ for 2 seconds to confirm proper completion of Teach-in process.

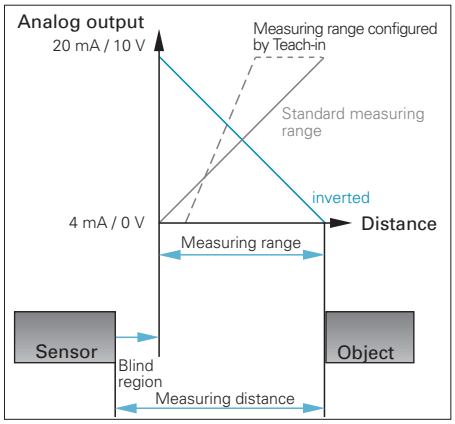


**Programmable output curve**

**Optional on request**

Separate digital PNP output with one switching point which may be set using the Teach-in function.

**Inverting the output function to 10 ... 0 V**

Sensor output signal can be inverted to 10 ... 0 V by teaching the far limit Sde first and the sensor close limit Sdc second.

**Restore default settings or improper set up**

Press teach-in button and hold for more than 6 seconds. Both sensor LEDs flashing fast indicate the restore operation.

**Teach-in lock**

The Teach-in function is locked five minutes after power up or five minutes after the end of the last Teach-in process.

| | |
|---|---|
| Linearity | Deviations in linearity are mainly generated within the sensor and by changes in ambient temperature. Resolution, temperature drift and repeatability define the linearity error. |
| Minimum load resistance | The voltage drop across the load resistance is proportional to the current, using a sensor with current output. To ensure a proper functioning of the output stage do not exceed the maximum permissible load resistance as stated in the data sheet. |
| Resolution | Defines the smallest position change of the object which causes a change in voltage or current at the sensor output. |

## rectangular designs

| product family | UNCK 09 | UNCK 09 | UNCK 09 | UNCK 09 | UNCK 09 | UNDK 09 | UNDK 09 |
|---|---|---|---|---|---|---|---|
| | | | | | | | |
| | | | | | | | |
| | | IO-Link | | | | | IO-Link |
| width / diameter | 8,6 mm | 8,6 mm | 8,6 mm | 8,6 mm | 8,6 mm | 8,6 mm | 8,6 mm |
| scanning range sd | 30 ... 200 mm | 30 ... 200 mm | 30 ... 200 mm | 3 ... 150 mm | 3 ... 150 mm | 30 ... 200 mm | 30 ... 200 mm |
| adjustment | Teach-in | Teach-in and IO-Link | | Teach-in | | Teach-in | Teach-in and IO-Link |
| repeat accuracy | < 0,5 mm | < 0,5 mm | < 0,5 mm | < 0,5 mm | < 0,5 mm | < 0,5 mm | < 0,5 mm |
| push-pull / IO-Link | | ■ | | | | | ■ |
| RS 232 | | | ■ | | ■ | | |
| voltage output | ■ | | | ■ | | ■ | |
| current output | | | | | | | |
| operating temperature | 0 ... +60 °C | 0 ... +60 °C | 0 ... +60 °C | 0 ... +60 °C | 0 ... +60 °C | 0 ... +60 °C | 0 ... +60 °C |
| housing material | PA 12 | PA 12 | PA 12 | PA 12 | PA 12 | PA 12 | PA 12 |
| cable PUR 4 x 0,08, 2 m | ■ | ■ | ■ | ■ | ■ | ■ | ■ |
| flylead connector M8, L=200 mm | ■ | ■ | ■ | ■ | ■ | ■ | ■ |
| connector M8 | | | | | | | |
| **page** | **26** | **27** | **28** | **29** | **30** | **31** | **32** |

## rectangular / cylindrical designs

| product family | UNDK 30 | UNDK 30 | UNDK 30 | UNDK 30 | UNAM 12 | UNAM 12 | UNAM 12 |
|---|---|---|---|---|---|---|---|
| | | | | | | | |
| special type | | | | | | | |
| width / diameter | 30 mm | 30 mm | 30 mm | 30 mm | 12 mm | 12 mm | 12 mm |
| scanning range sd | 30 ... 250 mm | 60 ... 400 mm | 100 ... 1000 mm | 200 ... 2000 mm | 2 ... 82 mm | 20 ... 200 mm | 60 ... 400 mm |
| adjustment | Teach-in potentiometer | Teach-in potentiometer | Teach-in potentiometer | Teach-in | external Teach-in | external Teach-in | external Teach-in |
| repeat accuracy | < 0,5 mm | < 0,5 mm | < 0,5 mm | < 1 mm | < 0,5 mm | < 0,5 mm | < 0,5 mm |
| voltage output | ■ | ■ | ■ | ■ | ■ | ■ | ■ |
| current output | ■ | ■ | ■ | ■ | | ■ | ■ |
| operating temperature | -10 ... +60 °C | -10 ... +60 °C | -10 ... +60 °C | -10 ... +60 °C | -10 ... +60 °C | -10 ... +60 °C | -10 ... +60 °C |
| housing material | polyester / die-cast zinc | polyester / die-cast zinc | polyester / die-cast zinc | polyester / die-cast zinc | brass nickel plated | brass nickel plated | brass nickel plated |
| cable, 2 m | ■ | ■ | ■ | ■ | | | |
| connector M12 | ■ | ■ | ■ | ■ | ■ | ■ | ■ |
| **page** | **40** | **41** | **42** | **43** | **44** | **45** | **46** |

| UNDK 09 | UNDK 09 | UNDK 09 | UNDK 10 | UNDK 20 | UNDK 20 | UNDK 20 |
|---|---|---|---|---|---|---|
| | | | | | | |
| | | | *SONUS* | | | |
| 8,6 mm | 8,6 mm | 8,6 mm | 10,4 mm | 20 mm | 20 mm | 20 mm |
| 30 ... 200 mm | 3 ... 150 mm | 3 ... 150 mm | 20 ... 200 mm | 20 ... 200 mm | 60 ... 400 mm | 100 ... 1000 mm |
| | Teach-in | | Teach-in | Teach-in | Teach-in | Teach-in |
| < 0,5 mm | < 0,5 mm | < 0,5 mm | < 0,5 mm | < 0,5 mm | < 0,5 mm | < 0,5 mm |
| | | | | | | |
| ■ | | ■ | | | | |
| | ■ | | ■ | ■ | ■ | ■ |
| | | | | ■ | ■ | ■ |
| 0 ... +60 °C | 0 ... +60 °C | 0 ... +60 °C | -10 ... +60 °C | -10 ... +60 °C | -10 ... +60 °C | -10 ... +60 °C |
| PA 12 | PA 12 | PA 12 | plastic (ASA) | polyester | polyester | polyester |
| ■ | ■ | ■ | ■ | | | |
| ■ | ■ | ■ | ■ | | | |
| | | | ■ | ■ | ■ | ■ |
| **33** | **34** | **35** | **36** | **37** | **38** | **39** |

| UNAM 18 | UNAR 18 | UNAR 18 | UNAM 30 | UNAM 50 |
|---|---|---|---|---|
| | | | | |
| | chemically resistant | chemically resistant | | |
| 18 mm | 18 mm | 18 mm | 30 mm | 30 mm |
| 100 ... 1000 mm | 60 ... 400 mm | 100 ... 1000 mm | 100 ... 1000 mm | 400 ... 2500 mm |
| Teach-in | Teach-in | Teach-in | Teach-in potentiometer | Teach-in |
| < 0,5 mm | < 0,5 mm | < 0,5 mm | < 0,5 mm | < 1 mm |
| ■ | ■ | ■ | ■ | ■ |
| ■ | ■ | ■ | ■ | ■ |
| -10 ... +60 °C | 0 ... +60 °C | 0 ... +60 °C | -10 ... +60 °C | -10 ... +60 °C |
| brass nickel plated | stainless steel 1.4435 (V4A) | stainless steel 1.4435 (V4A) | brass nickel plated | brass nickel plated |
| | | | ■ | ■ |
| ■ | ■ | ■ | ■ | ■ |
| **47** | **48** | **49** | **50** | **51** |

# Sd = 200 mm

- short response time
- high resolution
- detects the smallest objects

| general data | |
|---|---|
| scanning range sd | 30 ... 200 mm |
| scanning range close limit Sdc | 30 ... 200 mm |
| scanning range far limit Sde | 30 ... 200 mm |
| repeat accuracy | < 0,5 mm |
| resolution | < 0,3 mm |
| adjustment | Teach-in |
| sonic frequency | 380 kHz |
| response time ton | < 35 ms |
| release time toff | < 35 ms |
| alignment aid | target indication flashing |
| light indicator | yellow LED / red LED |
| temperature drift | < 2 % of distance to target So |
| **electrical data** | |
| voltage supply range +Vs | 15 ... 30 VDC |
| current consumption max. (no load) | 35 mA |
| output circuit | voltage output |
| output signal | 0 ... 10 V / 10 ... 0 V |
| output current | < 15 mA |
| residual ripple | < 10 % Vs |
| short circuit protection | yes |
| reverse polarity protection | yes |
| **mechanical data** | |
| type | rectangular |
| housing material | PA 12 |
| width / diameter | 8,6 mm |
| height / length | 55 mm |
| depth | 24,5 mm |
| **ambient conditions** | |
| operating temperature | 0 ... +60 °C |
| protection class | IP 67 |

| order reference | connection types |
|---|---|
| UNCK 09U6914 | cable PUR 4 x 0,08, 2 m |
| UNCK 09U6914/KS35A | flylead connector M8, L=200 mm |

## dimension drawing

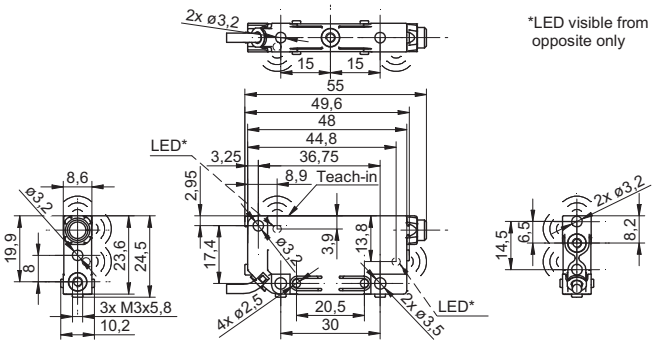


## flylead connector version

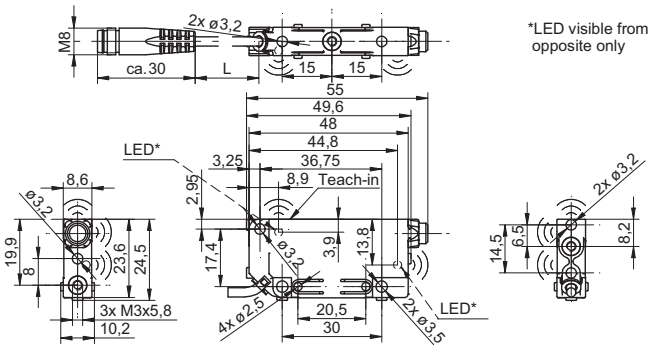


standard cable length 200 mm (L)

## connection diagram

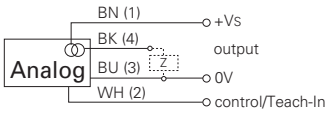


## typical sonic cone profile

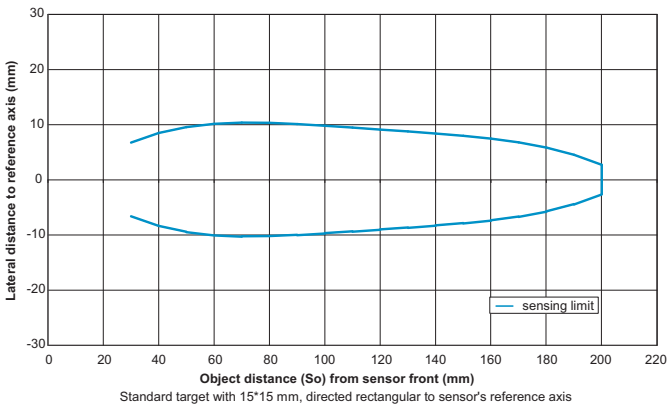


Standard target with 15*15 mm, directed rectangular to sensor's reference axis

## connectors and mating connectors

| | |
|---|---|
| ESG 32AH0200 | Connector M8, 4 pin, straight, 2 m |
| ESW 31AH0200 | Connector M8, 4 pin, angular, 2 m |

additional cable connectors and field wireable connectors: see accessories

# Sd = 200 mm

IO-Link

- IO-Link
- short response time
- high resolution

| general data | |
|---|---|
| scanning range sd | 30 ... 200 mm |
| scanning range close limit Sdc | 30 ... 200 mm |
| scanning range far limit Sde | 30 ... 200 mm |
| repeat accuracy | < 0,5 mm |
| repeat accuracy (filter active) | < 0,1 mm |
| resolution | < 0,3 mm |
| resolution (filter active) | < 0,1 mm |
| adjustment | Teach-in and IO-Link |
| sonic frequency | 380 kHz |
| response time ton | < 7 ms |
| alignment aid | target indication flashing |
| light indicator | green LED / red LED |
| temperature drift | < 2 % of distance to target So |
| **electrical data** | |
| voltage supply range +Vs | 18 ... 30 VDC |
| current consumption max. (no load) | 35 mA |
| output circuit | push-pull / IO-Link |
| baud rate | 38400 |
| short circuit protection | yes |
| reverse polarity protection | yes |
| **mechanical data** | |
| type | rectangular |
| housing material | PA 12 |
| width / diameter | 8,6 mm |
| height / length | 55 mm |
| depth | 24,5 mm |
| **ambient conditions** | |
| operating temperature | 0 ... +60 °C |
| protection class | IP 67 |

| order reference | connection types |
|---|---|
| **UNCK 09G8914/IO** | cable PUR 4 x 0,08, 2 m |
| **UNCK 09G8914/KS35A/IO** | flylead connector M8, L=200 mm |

## dimension drawing

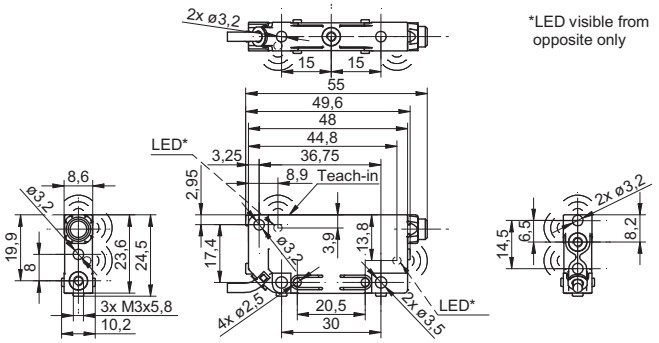


## flylead connector version

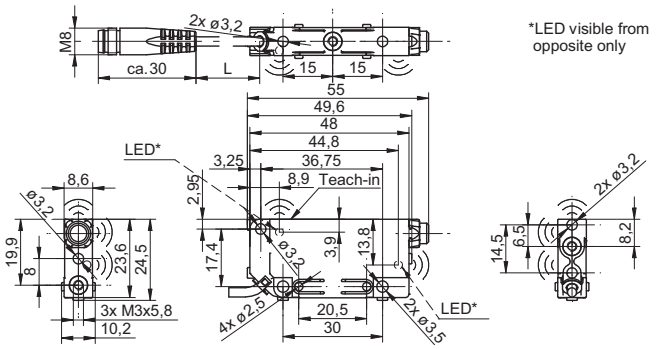


standard cable length 200 mm (L)

## connection diagram

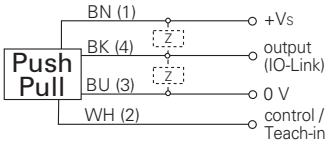


## typical sonic cone profile

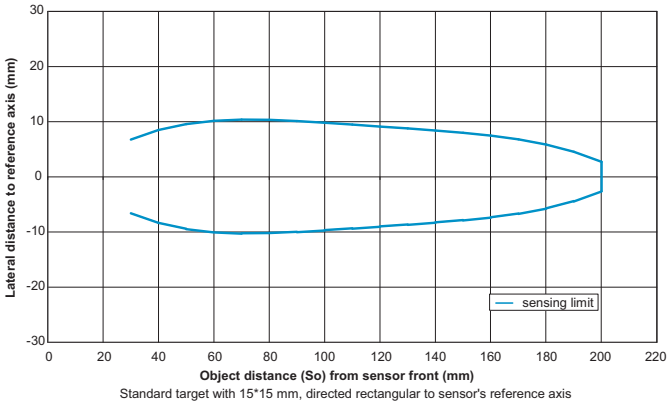


Standard target with 15*15 mm, directed rectangular to sensor's reference axis

## connectors and mating connectors

| | |
|---|---|
| ESG 32AH0200 | Connector M8, 4 pin, straight, 2 m |
| ESW 31AH0200 | Connector M8, 4 pin, angular, 2 m |

additional cable connectors and field wireable connectors: see accessories

# Sd = 200 mm

- serial interface RS 232
- high resolution
- short response time

| general data | |
|---|---|
| scanning range sd | 30 ... 200 mm |
| scanning range close limit Sdc | 30 ... 200 mm |
| scanning range far limit Sde | 30 ... 200 mm |
| repeat accuracy | < 0,5 mm |
| repeat accuracy (filter active) | < 0,1 mm |
| resolution | < 0,3 mm |
| resolution (filter active) | < 0,1 mm |
| sonic frequency | 380 kHz |
| response time ton | < 7 ms |
| alignment aid | target indication flashing |
| light indicator | yellow LED / red LED |
| temperature drift | < 0,18 % Sde/K (comp. off, factory set)<br>< 2 % So (compensation on) |
| **electrical data** | |
| voltage supply range +Vs | 15 ... 30 VDC |
| current consumption max. (no load) | 35 mA |
| output circuit | RS 232 |
| baud rate | 115200 |
| residual ripple | < 10 % Vs |
| short circuit protection | yes |
| reverse polarity protection | yes, Vs to GND |
| **mechanical data** | |
| type | rectangular |
| housing material | PA 12 |
| width / diameter | 8,6 mm |
| height / length | 55 mm |
| depth | 24,5 mm |
| **ambient conditions** | |
| operating temperature | 0 ... +60 °C |
| protection class | IP 67 |

| order reference | connection types |
|---|---|
| **UNCK 09T9114** | cable PUR 4 x 0,08, 2 m |
| **UNCK 09T9114/KS35A** | flylead connector M8, L=200 mm |

## dimension drawing

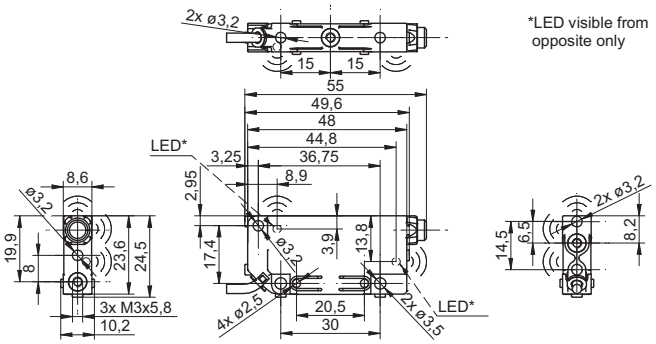


## flylead connector version

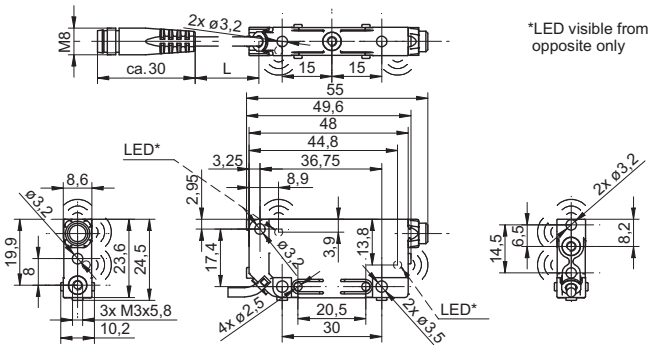


standard cable length 200 mm (L)

## connection diagram

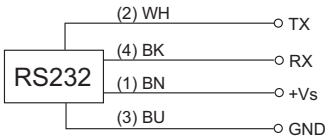


Sensor PINs

## typical sonic cone profile

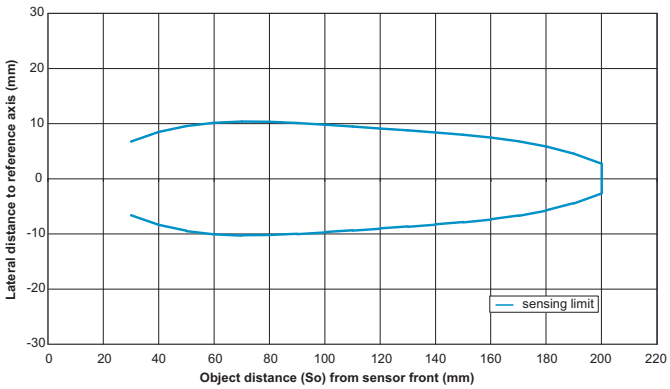


Standard target with 15*15 mm, directed rectangular to sensor's reference axis

## connectors and mating connectors

| | |
|---|---|
| ESG 32AH0200 | Connector M8, 4 pin, straight, 2 m |
| ESW 31AH0200 | Connector M8, 4 pin, angular, 2 m |

additional cable connectors and field wireable connectors: see accessories

# Sd = 150 mm

- measurement in very small containers
- stackability in a 9 mm pitch
- short response time

| general data | |
|---|---|
| scanning range sd | 3 ... 150 mm |
| scanning range close limit Sdc | 3 ... 150 mm |
| scanning range far limit Sde | 3 ... 150 mm |
| repeat accuracy | < 0,5 mm |
| resolution | < 0,3 mm |
| adjustment | Teach-in |
| sonic frequency | 380 kHz |
| response time ton | < 35 ms |
| release time toff | < 35 ms |
| alignment aid | target indication flashing |
| light indicator | yellow LED / red LED |
| temperature drift | < 2 % of distance to target So |
| **electrical data** | |
| voltage supply range +Vs | 15 ... 30 VDC |
| current consumption max. (no load) | 35 mA |
| output circuit | voltage output |
| output signal | 0 ... 10 V / 10 ... 0 V |
| output current | < 15 mA |
| residual ripple | < 10 % Vs |
| short circuit protection | yes |
| reverse polarity protection | yes |
| **mechanical data** | |
| type | rectangular |
| housing material | PA 12 |
| material (beam columnator) | POM |
| width / diameter | 8,6 mm |
| height / length | 82 mm |
| depth | 24,5 mm |
| **ambient conditions** | |
| operating temperature | 0 ... +60 °C |
| protection class | IP 67 |

| order reference | connection types |
|---|---|
| **UNCK 09U6914/D1** | cable PUR 4 x 0,08, 2 m |
| **UNCK 09U6914/KS35AD1** | flylead connector M8, L=200 mm |

## dimension drawing

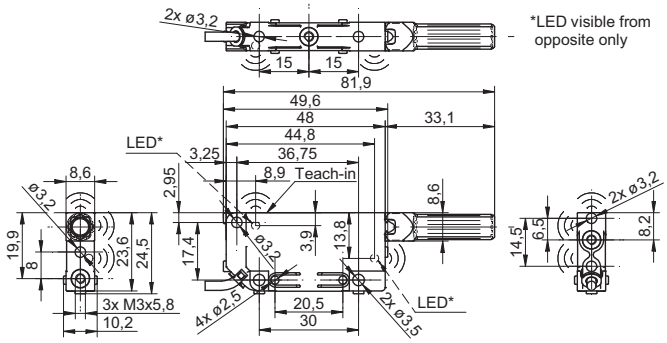


## flylead connector version

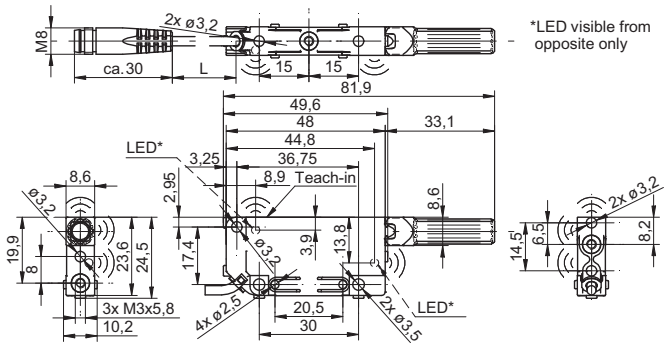


standard cable length 200 mm (L)

## connection diagram

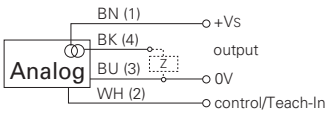


## typical sonic cone profile

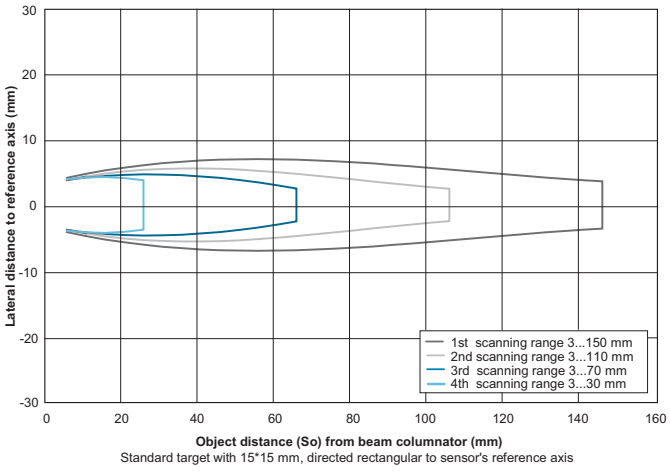


**Object distance (So) from beam columnator (mm)**
Standard target with 15*15 mm, directed rectangular to sensor's reference axis

## connectors and mating connectors

| | |
|---|---|
| ESG 32AH0200 | Connector M8, 4 pin, straight, 2 m |
| ESW 31AH0200 | Connector M8, 4 pin, angular, 2 m |
| additional cable connectors and field wireable connectors: see accessories | |

# Sd = 150 mm

- serial interface RS 232
- measurement in very small containers
- high resolution

| general data | |
|---|---|
| scanning range sd | 3 ... 150 mm |
| scanning range close limit Sdc | 3 ... 150 mm |
| scanning range far limit Sde | 3 ... 150 mm |
| repeat accuracy | < 0,5 mm |
| repeat accuracy (filter active) | < 0,1 mm |
| resolution | < 0,3 mm |
| resolution (filter active) | < 0,1 mm |
| sonic frequency | 380 kHz |
| response time ton | < 7 ms |
| alignment aid | target indication flashing |
| light indicator | yellow LED / red LED |
| temperature drift | < 0,18 % Sde/K (comp. off, factory set)<br>< 2 % So (compensation on) |
| **electrical data** | |
| voltage supply range +Vs | 15 ... 30 VDC |
| current consumption max. (no load) | 35 mA |
| output circuit | RS 232 |
| baud rate | 115200 |
| residual ripple | < 10 % Vs |
| short circuit protection | yes |
| reverse polarity protection | yes, Vs to GND |
| **mechanical data** | |
| type | rectangular |
| housing material | PA 12 |
| material (beam columnator) | POM |
| width / diameter | 8,6 mm |
| height / length | 82 mm |
| depth | 24,5 mm |
| **ambient conditions** | |
| operating temperature | 0 ... +60 °C |
| protection class | IP 67 |

| order reference | connection types |
|---|---|
| **UNCK 09T9114/D1** | cable PUR 4 x 0,08, 2 m |
| **UNCK 09T9114/KS35AD1** | flylead connector M8, L=200 mm |

## dimension drawing

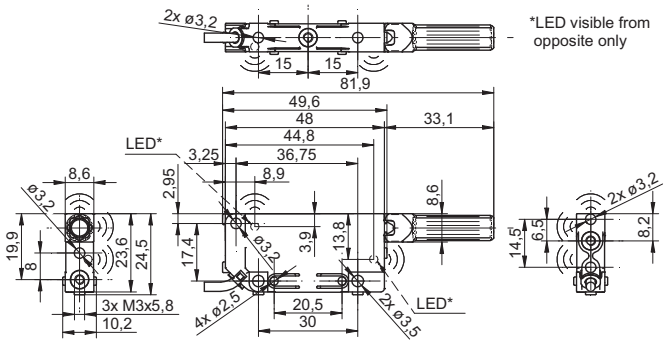


## flylead connector version

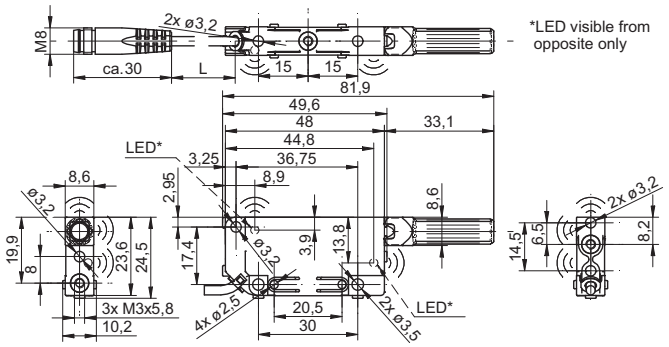


standard cable length 200 mm (L)

## connection diagram

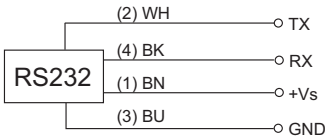


Sensor PINs

## typical sonic cone profile

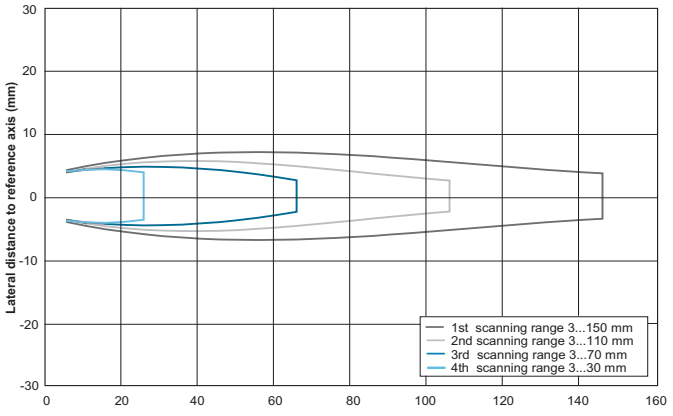


**Object distance (So) from beam columnator (mm)**

Standard target with 15*15 mm, directed rectangular to sensor's reference axis

## connectors and mating connectors

| | |
|---|---|
| ESG 32AH0200 | Connector M8, 4 pin, straight, 2 m |
| ESW 31AH0200 | Connector M8, 4 pin, angular, 2 m |

additional cable connectors and field wireable connectors: see accessories

# Sd = 200 mm

- short response time
- internal and external Teach-in
- detects the smallest objects

| general data | |
|---|---|
| scanning range sd | 30 ... 200 mm |
| scanning range close limit Sdc | 30 ... 200 mm |
| scanning range far limit Sde | 30 ... 200 mm |
| repeat accuracy | < 0,5 mm |
| resolution | < 0,3 mm |
| adjustment | Teach-in |
| sonic frequency | 380 kHz |
| response time ton | < 35 ms |
| release time toff | < 35 ms |
| alignment aid | target indication flashing |
| light indicator | yellow LED / red LED |
| temperature drift | < 2 % of distance to target So |
| **electrical data** | |
| voltage supply range +Vs | 15 ... 30 VDC |
| current consumption max. (no load) | 35 mA |
| output circuit | voltage output |
| output signal | 0 ... 10 V / 10 ... 0 V |
| output current | < 15 mA |
| residual ripple | < 10 % Vs |
| short circuit protection | yes |
| reverse polarity protection | yes |
| **mechanical data** | |
| type | rectangular |
| housing material | PA 12 |
| width / diameter | 8,6 mm |
| height / length | 48,8 mm |
| depth | 30,5 mm |
| **ambient conditions** | |
| operating temperature | 0 ... +60 °C |
| protection class | IP 67 |

| order reference | connection types |
|---|---|
| **UNDK 09U6914** | cable PUR 4 x 0,08, 2 m |
| **UNDK 09U6914/KS35A** | flylead connector M8, L=200 mm |

## dimension drawing

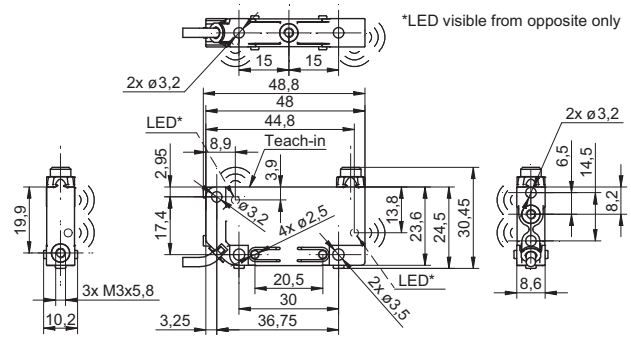


## flylead connector version

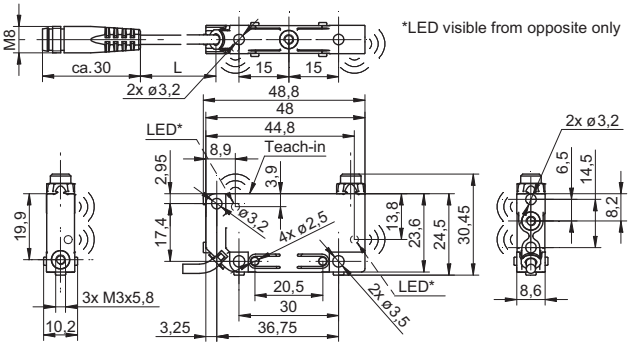


standard cable length 200 mm (L)

## connection diagram

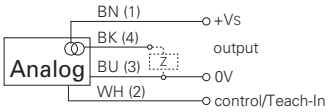


## typical sonic cone profile

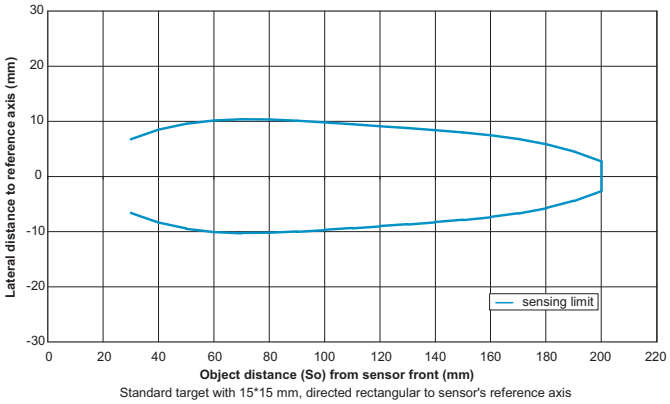


Standard target with 15*15 mm, directed rectangular to sensor's reference axis

## connectors and mating connectors

| | |
|---|---|
| ESG 32AH0200 | Connector M8, 4 pin, straight, 2 m |
| ESW 31AH0200 | Connector M8, 4 pin, angular, 2 m |
| additional cable connectors and field wireable connectors: see accessories | |

# Sd = 200 mm

IO-Link

- IO-Link
- short response time
- high resolution

| general data | |
|---|---|
| scanning range sd | 30 ... 200 mm |
| scanning range close limit Sdc | 30 ... 200 mm |
| scanning range far limit Sde | 30 ... 200 mm |
| repeat accuracy | < 0,5 mm |
| repeat accuracy (filter active) | < 0,1 mm |
| resolution | < 0,3 mm |
| resolution (filter active) | < 0,1 mm |
| adjustment | Teach-in and IO-Link |
| sonic frequency | 380 kHz |
| response time ton | < 7 ms |
| alignment aid | target indication flashing |
| light indicator | green LED / red LED |
| temperature drift | < 2 % of distance to target So |
| **electrical data** | |
| voltage supply range +Vs | 18 ... 30 VDC |
| current consumption max. (no load) | 35 mA |
| output circuit | push-pull / IO-Link |
| baud rate | 38400 |
| short circuit protection | yes |
| reverse polarity protection | yes |
| **mechanical data** | |
| type | rectangular |
| housing material | PA 12 |
| width / diameter | 8,6 mm |
| height / length | 48,8 mm |
| depth | 30,5 mm |
| **ambient conditions** | |
| operating temperature | 0 ... +60 °C |
| protection class | IP 67 |

| order reference | connection types |
|---|---|
| UNDK 09G8914/IO | cable PUR 4 x 0,08, 2 m |
| UNDK 09G8914/KS35A/IO | flylead connector M8, L=200 mm |

## dimension drawing

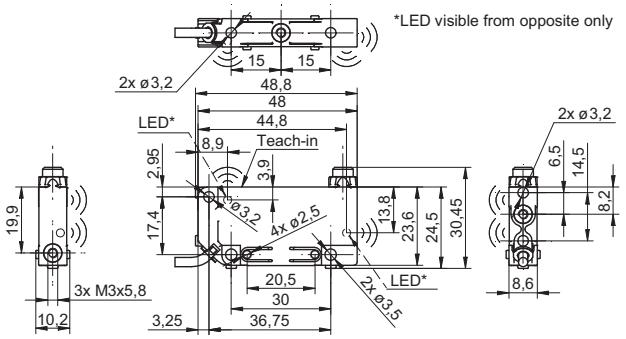


## flylead connector version

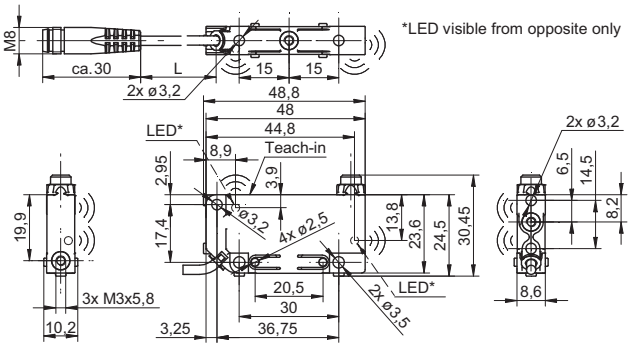


standard cable length 200 mm (L)

## connection diagram

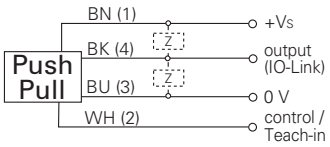


## typical sonic cone profile

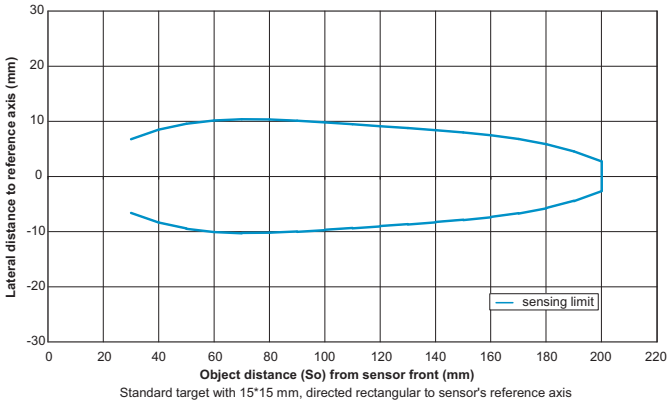


Standard target with 15*15 mm, directed rectangular to sensor's reference axis

## connectors and mating connectors

| | |
|---|---|
| ESG 32AH0200 | Connector M8, 4 pin, straight, 2 m |
| ESW 31AH0200 | Connector M8, 4 pin, angular, 2 m |
| additional cable connectors and field wireable connectors: see accessories | |

# Sd = 200 mm

- serial interface RS 232
- high resolution
- short response time

| general data | |
|---|---|
| scanning range sd | 30 ... 200 mm |
| scanning range close limit Sdc | 30 ... 200 mm |
| scanning range far limit Sde | 30 ... 200 mm |
| repeat accuracy | < 0,5 mm |
| repeat accuracy (filter active) | < 0,1 mm |
| resolution | < 0,3 mm |
| resolution (filter active) | < 0,1 mm |
| sonic frequency | 380 kHz |
| response time ton | < 7 ms |
| alignment aid | target indication flashing |
| light indicator | yellow LED / red LED |
| temperature drift | < 0,18 % Sde/K (comp. off, factory set)<br>< 2 % So (compensation on) |
| **electrical data** | |
| voltage supply range +Vs | 15 ... 30 VDC |
| current consumption max. (no load) | 35 mA |
| output circuit | RS 232 |
| baud rate | 115200 |
| residual ripple | < 10 % Vs |
| short circuit protection | yes |
| reverse polarity protection | yes, Vs to GND |
| **mechanical data** | |
| type | rectangular |
| housing material | PA 12 |
| width / diameter | 8,6 mm |
| height / length | 48,8 mm |
| depth | 30,5 mm |
| **ambient conditions** | |
| operating temperature | 0 ... +60 °C |
| protection class | IP 67 |

| order reference | connection types |
|---|---|
| **UNDK 09T9114** | cable PUR 4 x 0,08, 2 m |
| **UNDK 09T9114/KS35A** | flylead connector M8, L=200 mm |

## dimension drawing

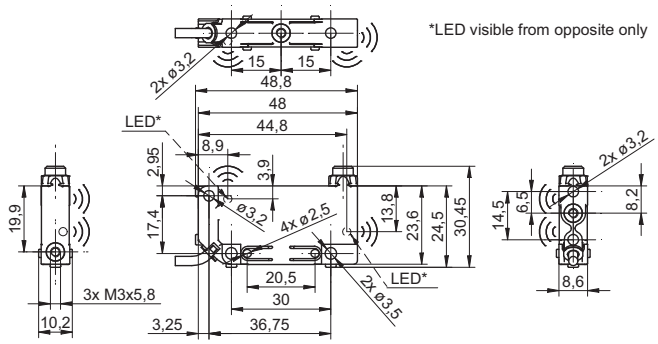


## flylead connector version

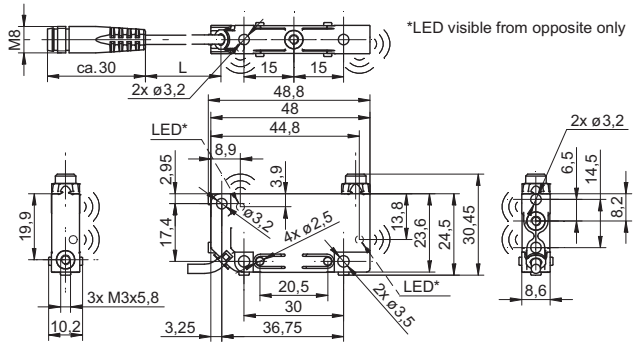


standard cable length 200 mm (L)

## connection diagram

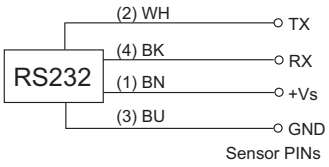


Sensor PINs

## typical sonic cone profile

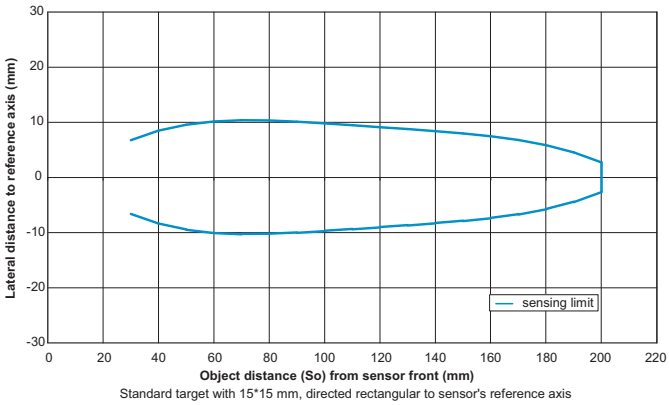


Standard target with 15*15 mm, directed rectangular to sensor's reference axis

## connectors and mating connectors

| | |
|---|---|
| ESG 32AH0200 | Connector M8, 4 pin, straight, 2 m |
| ESW 31AH0200 | Connector M8, 4 pin, angular, 2 m |

additional cable connectors and field wireable connectors: see accessories

# Sd = 150 mm

- measurement in very small containers
- stackability in a 9 mm pitch
- short response time

| general data | |
|---|---|
| scanning range sd | 3 ... 150 mm |
| scanning range close limit Sdc | 3 ... 150 mm |
| scanning range far limit Sde | 3 ... 150 mm |
| repeat accuracy | < 0,5 mm |
| resolution | < 0,3 mm |
| adjustment | Teach-in |
| sonic frequency | 380 kHz |
| response time ton | < 35 ms |
| release time toff | < 35 ms |
| alignment aid | target indication flashing |
| light indicator | yellow LED / red LED |
| temperature drift | < 2 % of distance to target So |
| **electrical data** | |
| voltage supply range +Vs | 15 ... 30 VDC |
| current consumption max. (no load) | 35 mA |
| output circuit | voltage output |
| output signal | 0 ... 10 V / 10 ... 0 V |
| output current | < 15 mA |
| residual ripple | < 10 % Vs |
| short circuit protection | yes |
| reverse polarity protection | yes |
| **mechanical data** | |
| type | rectangular |
| housing material | PA 12 |
| material (beam columnator) | POM |
| width / diameter | 8,6 mm |
| height / length | 48,8 mm |
| depth | 57,7 mm |
| **ambient conditions** | |
| operating temperature | 0 ... +60 °C |
| protection class | IP 67 |

| order reference | connection types |
|---|---|
| **UNDK 09U6914/D1** | cable PUR 4 x 0,08, 2 m |
| **UNDK 09U6914/KS35AD1** | flylead connector M8, L=200 mm |

## dimension drawing

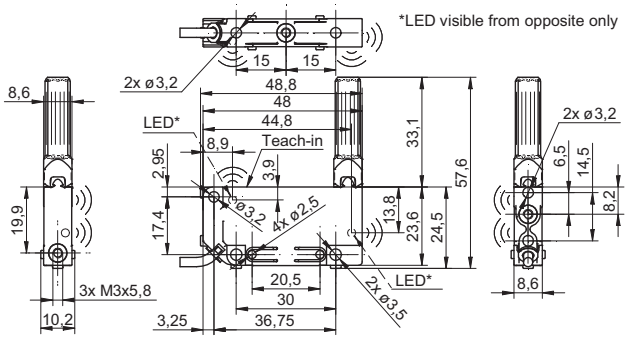


## flylead connector version

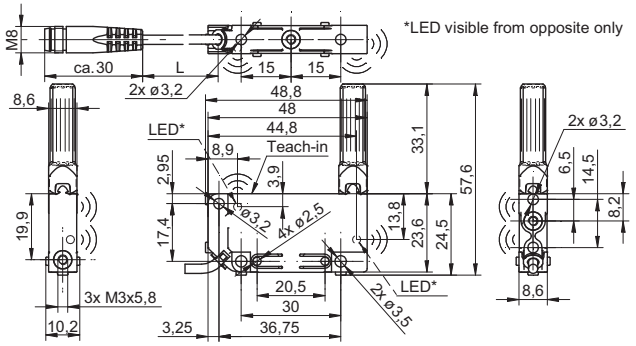


standard cable length 200 mm (L)

## connection diagram

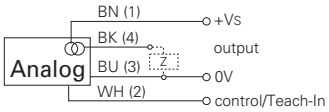


## typical sonic cone profile

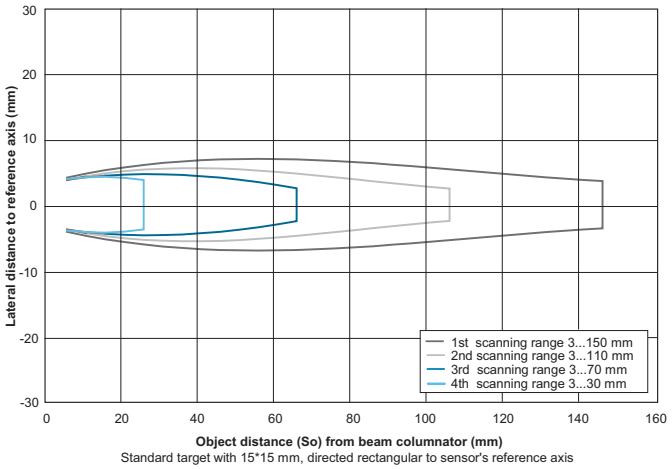


**Object distance (So) from beam columnator (mm)**
Standard target with 15*15 mm, directed rectangular to sensor's reference axis

## connectors and mating connectors

| | |
|---|---|
| ESG 32AH0200 | Connector M8, 4 pin, straight, 2 m |
| ESW 31AH0200 | Connector M8, 4 pin, angular, 2 m |

additional cable connectors and field wireable connectors: see accessories

## Sd = 150 mm

- serial interface RS 232
- measurement in very small containers
- high resolution

| general data | |
|---|---|
| scanning range sd | 3 ... 150 mm |
| scanning range close limit Sdc | 3 ... 150 mm |
| scanning range far limit Sde | 3 ... 150 mm |
| repeat accuracy | < 0,5 mm |
| repeat accuracy (filter active) | < 0,1 mm |
| resolution | < 0,3 mm |
| resolution (filter active) | < 0,1 mm |
| sonic frequency | 380 kHz |
| response time ton | < 7 ms |
| alignment aid | target indication flashing |
| light indicator | yellow LED / red LED |
| temperature drift | < 0,18 % Sde/K (comp. off, factory set)<br>< 2 % So (compensation on) |
| **electrical data** | |
| voltage supply range +Vs | 15 ... 30 VDC |
| current consumption max. (no load) | 35 mA |
| output circuit | RS 232 |
| baud rate | 115200 |
| residual ripple | < 10 % Vs |
| short circuit protection | yes |
| reverse polarity protection | yes, Vs to GND |
| **mechanical data** | |
| type | rectangular |
| housing material | PA 12 |
| material (beam columnator) | POM |
| width / diameter | 8,6 mm |
| height / length | 48,8 mm |
| depth | 57,7 mm |
| **ambient conditions** | |
| operating temperature | 0 ... +60 °C |
| protection class | IP 67 |

| order reference | connection types |
|---|---|
| **UNDK 09T9114/D1** | cable PUR 4 x 0,08, 2 m |
| **UNDK 09T9114/KS35AD1** | flylead connector M8, L=200 mm |

### dimension drawing

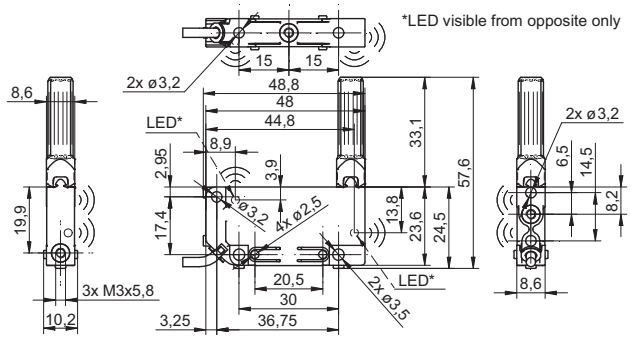


### flylead connector version

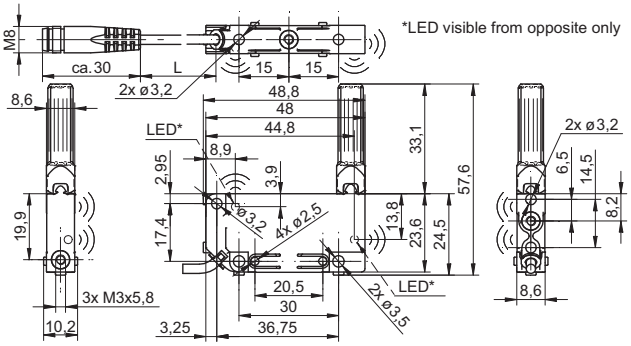


standard cable length 200 mm (L)

### connection diagram

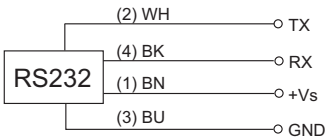


Sensor PINs

### typical sonic cone profile

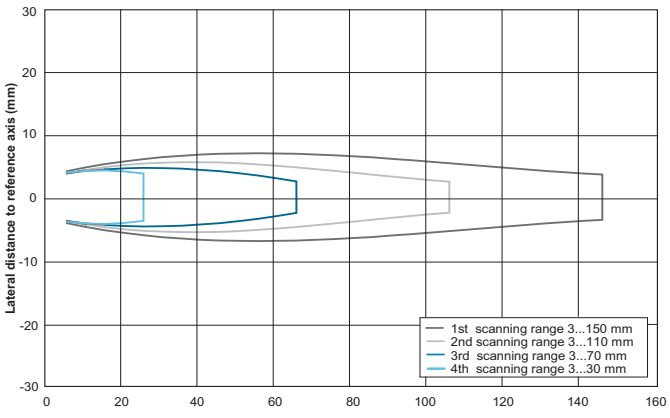


**Object distance (So) from beam columnator (mm)**

Standard target with 15*15 mm, directed rectangular to sensor's reference axis

### connectors and mating connectors

| | |
|---|---|
| ESG 32AH0200 | Connector M8, 4 pin, straight, 2 m |
| ESW 31AH0200 | Connector M8, 4 pin, angular, 2 m |

additional cable connectors and field wireable connectors: see accessories

# Sd = 200 mm

- compact housing
- very low mass (4 g)
- high resolution

| general data | |
|---|---|
| scanning range sd | 20 ... 200 mm |
| scanning range close limit Sdc | 20 ... 200 mm |
| scanning range far limit Sde | 20 ... 200 mm |
| repeat accuracy | < 0,5 mm |
| resolution | < 0,3 mm |
| adjustment | Teach-in |
| sonic frequency | 380 kHz |
| response time ton | < 60 ms |
| release time toff | < 60 ms |
| alignment aid | target indication flashing |
| light indicator | yellow LED / red LED |
| temperature drift | < 2 % of distance to target So |
| **electrical data** | |
| voltage supply range +Vs | 15 ... 30 VDC |
| current consumption max. (no load) | 35 mA |
| output circuit | voltage output |
| output signal | 0 ... 10 V / 10 ... 0 V |
| output current | < 20 mA |
| residual ripple | < 10 % Vs |
| short circuit protection | yes |
| reverse polarity protection | yes |
| **mechanical data** | |
| type | rectangular |
| housing material | plastic (ASA) |
| width / diameter | 10,4 mm |
| height / length | 27 mm |
| depth | 14 mm |
| **ambient conditions** | |
| operating temperature | -10 ... +60 °C |
| protection class | IP 67 |

| order reference | connection types |
|---|---|
| **UNDK 10U6914** | cable PUR 4 x 0,08, 2 m |
| **UNDK 10U6914/KS35A** | flylead connector M8, L=200 mm |
| **UNDK 10U6914/S35A** | connector M8 |

## dimension drawings

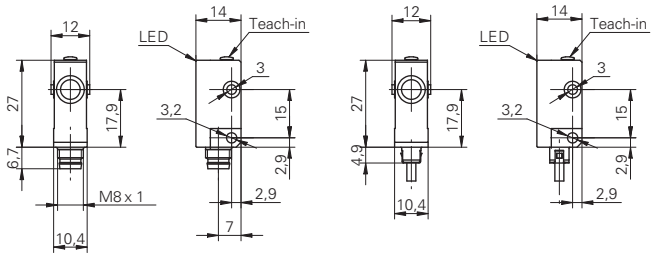


## flylead connector version

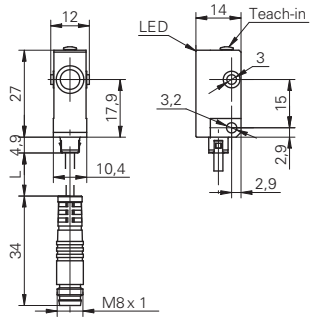


standard cable length 200 mm (L)

## connection diagram

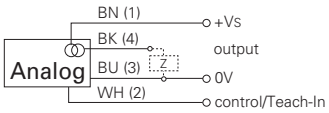


## typical sonic cone profile

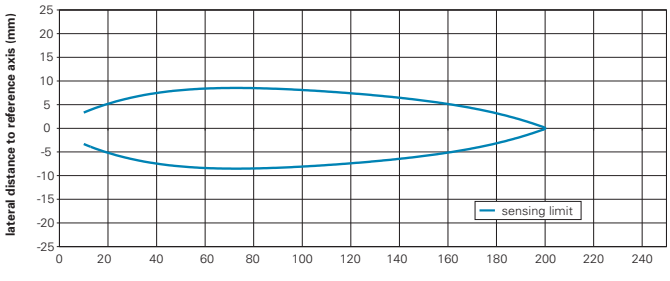


standard square target, size 15 x 15 mm, positioned perpendicularly to sensor's reference axis

| connectors and mating connectors | |
|---|---|
| ESG 32AH0200 | Connector M8, 4 pin, straight, 2 m |
| ESW 31AH0200 | Connector M8, 4 pin, angular, 2 m |
| additional cable connectors and field wireable connectors: see accessories | |

| Accessories | |
|---|---|
| 10150326 | Sensofix series 10 / series 20 |
| 10133792 | Mounting bracket series 10 (L design) |
| 10114501 | Mounting bracket series 10 (U design) |
| 10162083 | Mounting panel for sensors series 10 |
| 10162376 | Sonic beam deflector for ultrasonic sensors series 10 |
| for details: see accessories section | |

# Sd = 200 mm

- internal and external Teach-in
- 0 ... 10 V / 4 ... 20 mA invertible
- small sonic beam angle

| general data | |
|---|---|
| scanning range sd | 20 ... 200 mm |
| scanning range close limit Sdc | 20 ... 200 mm |
| scanning range far limit Sde | 20 ... 200 mm |
| repeat accuracy | < 0,5 mm |
| resolution | < 0,3 mm |
| adjustment | Teach-in |
| sonic frequency | 380 kHz |
| response time ton | < 30 ms |
| release time toff | < 30 ms |
| alignment aid | target indication flashing |
| light indicator | yellow LED / red LED |
| temperature drift | < 2 % of distance to target So |
| **electrical data** | |
| voltage supply range +Vs | 15 ... 30 VDC |
| output current | < 20 mA |
| residual ripple | < 10 % Vs |
| short circuit protection | yes |
| reverse polarity protection | yes |
| **voltage output** | |
| current consumption max. (no load) | 35 mA |
| output signal | 0 ... 10 V / 10 ... 0 V |
| **current output** | |
| current consumption max. (no load) | 55 mA |
| output signal | 4 ... 20 mA / 20 ... 4 mA |
| load resistance +Vs max. | < 1100 Ohm |
| load resistance +Vs min. | < 400 Ohm |
| **mechanical data** | |
| type | rectangular |
| housing material | polyester |
| width / diameter | 20 mm |
| height / length | 42 mm |
| depth | 15 mm |
| connection types | connector M8 |
| **ambient conditions** | |
| operating temperature | -10 ... +60 °C |
| protection class | IP 67 |

| order reference | output circuit |
|---|---|
| **UNDK 20I6914/S35A** | current output |
| **UNDK 20U6914/S35A** | voltage output |

## dimension drawing

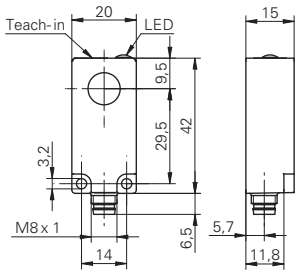


## connection diagram

## typical sonic cone profile

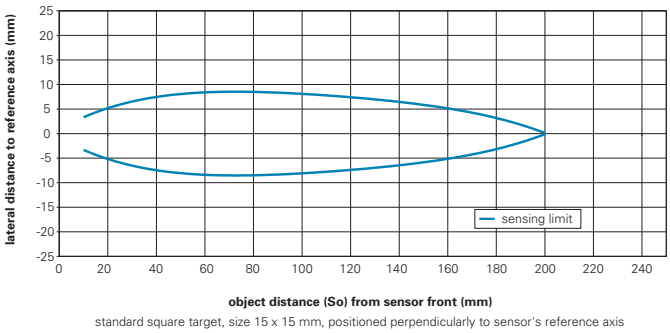


standard square target, size 15 x 15 mm, positioned perpendicularly to sensor's reference axis

| connectors and mating connectors | |
|---|---|
| ESG 32AH0200 | Connector M8, 4 pin, straight, 2 m |
| ESW 31AH0200 | Connector M8, 4 pin, angular, 2 m |
| additional cable connectors and field wireable connectors: see accessories | |

| Accessories | |
|---|---|
| 10150326 | Sensofix series 10 / series 20 |
| 10153290 | Sonic beam deflector series 20 |
| for details: see accessories section | |

# Sd = 400 mm

- internal and external Teach-in
- 0 ... 10 V / 4 ... 20 mA invertible
- wide sonic beam angle

| general data | |
|---|---|
| scanning range sd | 60 ... 400 mm |
| scanning range close limit Sdc | 60 ... 400 mm |
| scanning range far limit Sde | 60 ... 400 mm |
| repeat accuracy | < 0,5 mm |
| resolution | < 0,3 mm |
| adjustment | Teach-in |
| sonic frequency | 290 kHz |
| response time ton | < 60 ms |
| release time toff | < 60 ms |
| alignment aid | target indication flashing |
| light indicator | yellow LED / red LED |
| temperature drift | < 2 % of distance to target So |
| **electrical data** | |
| voltage supply range +Vs | 15 ... 30 VDC |
| output current | < 20 mA |
| residual ripple | < 10 % Vs |
| short circuit protection | yes |
| reverse polarity protection | yes |
| **voltage output** | |
| current consumption max. (no load) | 35 mA |
| output signal | 0 ... 10 V / 10 ... 0 V |
| **current output** | |
| current consumption max. (no load) | 55 mA |
| output signal | 4 ... 20 mA / 20 ... 4 mA |
| load resistance +Vs max. | < 1100 Ohm |
| load resistance +Vs min. | < 400 Ohm |
| **mechanical data** | |
| type | rectangular |
| housing material | polyester |
| width / diameter | 20 mm |
| height / length | 42 mm |
| depth | 15 mm |
| connection types | connector M8 |
| **ambient conditions** | |
| operating temperature | -10 ... +60 °C |
| protection class | IP 67 |

| order reference | output circuit |
|---|---|
| **UNDK 20I6912/S35A** | current output |
| **UNDK 20U6912/S35A** | voltage output |

## dimension drawing

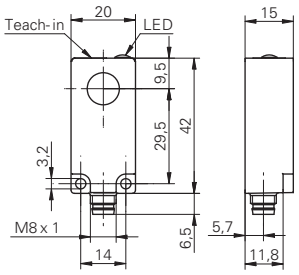


## connection diagram

## typical sonic cone profile

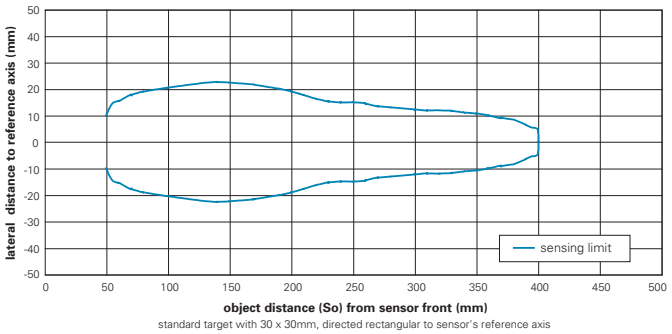


standard target with 30 x 30mm, directed rectangular to sensor's reference axis

| connectors and mating connectors | |
|---|---|
| ESG 32AH0200 | Connector M8, 4 pin, straight, 2 m |
| ESW 31AH0200 | Connector M8, 4 pin, angular, 2 m |
| additional cable connectors and field wireable connectors: see accessories | |

| Accessories | |
|---|---|
| 10150326 | Sensofix series 10 / series 20 |
| 10153290 | Sonic beam deflector series 20 |
| for details: see accessories section | |

# Sd = 1000 mm

- internal and external Teach-in
- 0 ... 10 V / 4 ... 20 mA invertible
- long sensing range

| general data | |
|---|---|
| scanning range sd | 100 ... 1000 mm |
| scanning range close limit Sdc | 100 ... 1000 mm |
| scanning range far limit Sde | 100 ... 1000 mm |
| repeat accuracy | < 0,5 mm |
| resolution | < 0,3 mm |
| adjustment | Teach-in |
| sonic frequency | 240 kHz |
| response time ton | < 80 ms |
| release time toff | < 80 ms |
| alignment aid | target indication flashing |
| light indicator | yellow LED / red LED |
| temperature drift | < 2 % of distance to target So |
| **electrical data** | |
| voltage supply range +Vs | 15 ... 30 VDC |
| output current | < 20 mA |
| residual ripple | < 10 % Vs |
| short circuit protection | yes |
| reverse polarity protection | yes |
| **voltage output** | |
| current consumption max. (no load) | 35 mA |
| output signal | 0 ... 10 V / 10 ... 0 V |
| **current output** | |
| current consumption max. (no load) | 55 mA |
| output signal | 4 ... 20 mA / 20 ... 4 mA |
| load resistance +Vs max. | < 1100 Ohm |
| load resistance +Vs min. | < 400 Ohm |
| **mechanical data** | |
| type | rectangular |
| housing material | polyester |
| width / diameter | 20 mm |
| height / length | 42 mm |
| depth | 15 mm |
| connection types | connector M8 |
| **ambient conditions** | |
| operating temperature | -10 ... +60 °C |
| protection class | IP 67 |

| order reference | output circuit |
|---|---|
| **UNDK 20I6903/S35A** | current output |
| **UNDK 20U6903/S35A** | voltage output |

## dimension drawing

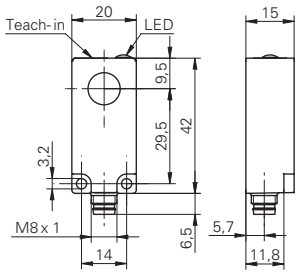


## connection diagram

## typical sonic cone profile

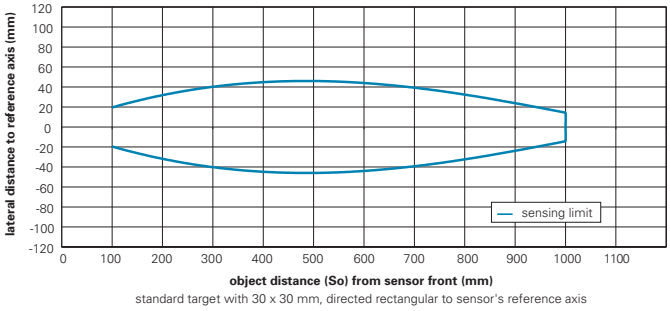


standard target with 30 x 30 mm, directed rectangular to sensor's reference axis

| connectors and mating connectors | |
|---|---|
| ESG 32AH0200 | Connector M8, 4 pin, straight, 2 m |
| ESW 31AH0200 | Connector M8, 4 pin, angular, 2 m |
| additional cable connectors and field wireable connectors: see accessories | |

| Accessories | |
|---|---|
| 10150326 | Sensofix series 10 / series 20 |
| 10153290 | Sonic beam deflector series 20 |
| for details: see accessories section | |

# Sd = 250 mm

- Teach-in or potentiometer
- 0 ... 10 V / 4 ... 20 mA
- signals of Teach-in version invertible

| general data | |
|---|---|
| scanning range sd | 30 ... 250 mm |
| scanning range far limit Sde | 30 ... 250 mm |
| repeat accuracy | < 0,5 mm |
| resolution | < 0,3 mm |
| sonic frequency | 300 kHz |
| response time ton | < 50 ms |
| release time toff | < 50 ms |
| alignment aid | target indication flashing |
| temperature drift | < 2 % of distance to target So |
| **potentiometer** | |
| light indicator | LED green |
| **Teach-in** | |
| scanning range close limit Sdc | 30 ... 250 mm |
| light indicator | yellow LED / red LED |
| **electrical data** | |
| voltage supply range +Vs | 15 ... 30 VDC |
| output current | < 20 mA |
| residual ripple | < 10 % Vs |
| short circuit protection | yes |
| reverse polarity protection | yes |
| **voltage output** | |
| current consumption max. (no load) | 35 mA |
| **current output** | |
| current consumption max. (no load) | 55 mA |
| load resistance +Vs max. | < 1100 Ohm |
| load resistance +Vs min. | < 400 Ohm |
| **mechanical data** | |
| type | rectangular |
| housing material | polyester / die-cast zinc |
| width / diameter | 30 mm |
| height / length | 65 mm |
| depth | 31 mm |
| **ambient conditions** | |
| operating temperature | -10 ... +60 °C |
| protection class | IP 67 |

## dimension drawings

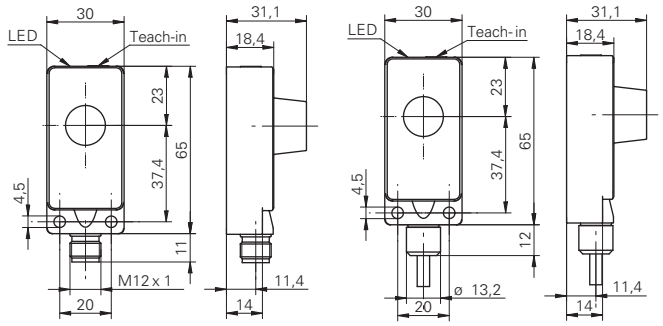


Teach-in = Teach-in or potentiometer

## connection diagram

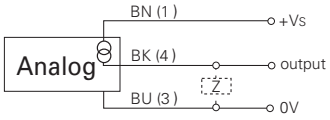


## typical sonic cone profile

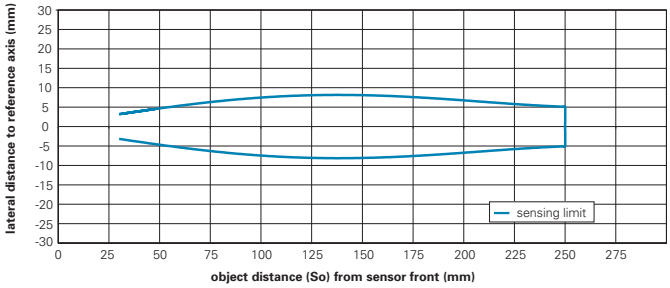


standard square target, size 15 x 15 mm, positioned perpendicularly to sensor's reference axis

| connectors and mating connectors | |
|---|---|
| ESG 34SH0200 | Connector M12, 3 pin, straight, 2 m |
| ESW 33SH0200 | Connector M12, 3 pin, angular, 2 m |
| additional cable connectors and field wireable connectors: see accessories | |
| **Accessories** | |
| 10152386 | Sensofix series 30 |
| 10163979 | Converter 3-point (M12) |
| for details: see accessories section | |

| order reference | adjustment | output circuit | output signal | connection types |
|---|---|---|---|---|
| **UNDK 30I6113** | Teach-in | current output | 4 ... 20 mA / 20 ... 4 mA | cable, 2 m |
| **UNDK 30I6113/S14** | Teach-in | current output | 4 ... 20 mA / 20 ... 4 mA | connector M12 |
| **UNDK 30U6113** | Teach-in | voltage output | 0 ... 10 V / 10 ... 0 V | cable, 2 m |
| **UNDK 30U6113/S14** | Teach-in | voltage output | 0 ... 10 V / 10 ... 0 V | connector M12 |
| **UNDK 30U9113** | potentiometer | voltage output | 0 ... 10 VDC | cable, 2 m |
| **UNDK 30U9113/S14** | potentiometer | voltage output | 0 ... 10 VDC | connector M12 |

## Sd = 400 mm

- Teach-in or potentiometer
- 0 ... 10 V / 4 ... 20 mA
- signals of Teach-in version invertible

| general data | |
|---|---|
| scanning range sd | 60 ... 400 mm |
| scanning range far limit Sde | 60 ... 400 mm |
| repeat accuracy | < 0,5 mm |
| resolution | < 0,3 mm |
| sonic frequency | 400 kHz |
| response time ton | < 60 ms |
| release time toff | < 60 ms |
| alignment aid | target indication flashing |
| temperature drift | < 2 % of distance to target So |
| **potentiometer** | |
| light indicator | LED green |
| **Teach-in** | |
| scanning range close limit Sdc | 60 ... 400 mm |
| light indicator | yellow LED / red LED |
| **electrical data** | |
| voltage supply range +Vs | 15 ... 30 VDC |
| output current | < 20 mA |
| residual ripple | < 10 % Vs |
| short circuit protection | yes |
| reverse polarity protection | yes |
| **voltage output** | |
| current consumption max. (no load) | 35 mA |
| **current output** | |
| current consumption max. (no load) | 55 mA |
| load resistance +Vs max. | < 1100 Ohm |
| load resistance +Vs min. | < 400 Ohm |
| **mechanical data** | |
| type | rectangular |
| housing material | polyester / die-cast zinc |
| width / diameter | 30 mm |
| height / length | 65 mm |
| depth | 31 mm |
| **ambient conditions** | |
| operating temperature | -10 ... +60 °C |
| protection class | IP 67 |

### dimension drawings

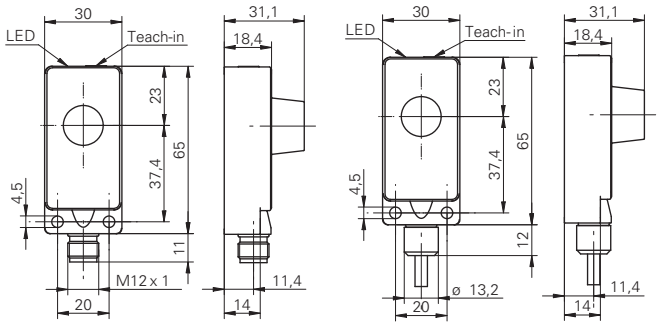


Teach-in = Teach-in or potentiometer

### connection diagram

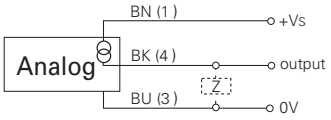


### typical sonic cone profile

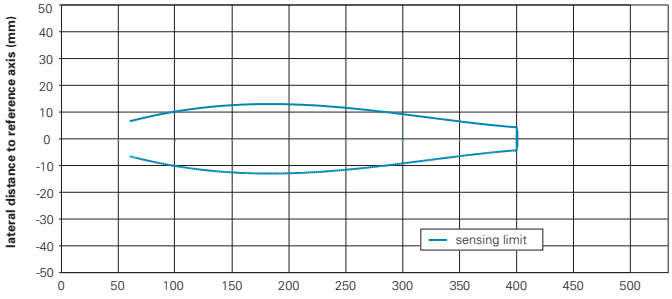


standard target with 30 x 30mm, directed rectangular to sensor's reference axis

### connectors and mating connectors

| | |
|---|---|
| ESG 34SH0200 | Connector M12, 3 pin, straight, 2 m |
| ESW 33SH0200 | Connector M12, 3 pin, angular, 2 m |

additional cable connectors and field wireable connectors: see accessories

### Accessories

| | |
|---|---|
| 10152386 | Sensofix series 30 |
| 10163979 | Converter 3-point (M12) |

for details: see accessories section

| order reference | adjustment | output circuit | output signal | connection types |
|---|---|---|---|---|
| **UNDK 30I6112** | Teach-in | current output | 4 ... 20 mA / 20 ... 4 mA | cable, 2 m |
| **UNDK 30I6112/S14** | Teach-in | current output | 4 ... 20 mA / 20 ... 4 mA | connector M12 |
| **UNDK 30U6112** | Teach-in | voltage output | 0 ... 10 V / 10 ... 0 V | cable, 2 m |
| **UNDK 30U6112/S14** | Teach-in | voltage output | 0 ... 10 V / 10 ... 0 V | connector M12 |
| **UNDK 30U9112** | potentiometer | voltage output | 0 ... 10 VDC | cable, 2 m |
| **UNDK 30U9112/S14** | potentiometer | voltage output | 0 ... 10 VDC | connector M12 |

# Sd = 1000 mm

- Teach-in or potentiometer
- 0 ... 10 V / 4 ... 20 mA
- signals of Teach-in version invertible

| general data | |
|---|---|
| scanning range sd | 100 ... 1000 mm |
| scanning range far limit Sde | 100 ... 1000 mm |
| repeat accuracy | < 0,5 mm |
| resolution | < 0,3 mm |
| sonic frequency | 240 kHz |
| response time ton | < 80 ms |
| release time toff | < 80 ms |
| alignment aid | target indication flashing |
| temperature drift | < 2 % of distance to target So |
| **potentiometer** | |
| light indicator | LED green |
| **Teach-in** | |
| scanning range close limit Sdc | 100 ... 1000 mm |
| light indicator | yellow LED / red LED |
| **electrical data** | |
| voltage supply range +Vs | 15 ... 30 VDC |
| output current | < 20 mA |
| residual ripple | < 10 % Vs |
| short circuit protection | yes |
| reverse polarity protection | yes |
| **voltage output** | |
| current consumption max. (no load) | 35 mA |
| **current output** | |
| current consumption max. (no load) | 55 mA |
| load resistance +Vs max. | < 1100 Ohm |
| load resistance +Vs min. | < 400 Ohm |
| **mechanical data** | |
| type | rectangular |
| housing material | polyester / die-cast zinc |
| width / diameter | 30 mm |
| height / length | 65 mm |
| depth | 31 mm |
| **ambient conditions** | |
| operating temperature | -10 ... +60 °C |
| protection class | IP 67 |

## dimension drawings

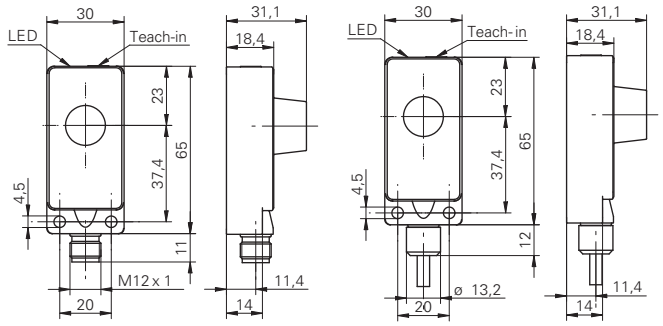


Teach-in = Teach-in or potentiometer

## connection diagram

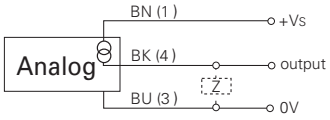


## typical sonic cone profile

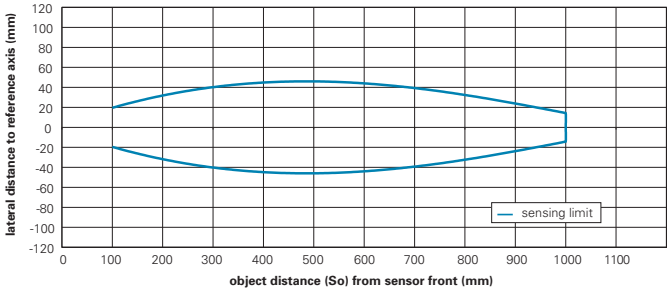


standard target with 30 x 30 mm, directed rectangular to sensor's reference axis

| connectors and mating connectors | |
|---|---|
| ESG 34AH0200 | Connector M12, 4 pin, straight, 2 m |
| ESW 33AH0200 | Connector M12, 4 pin, angular, 2 m |
| additional cable connectors and field wireable connectors: see accessories | |

| Accessories | |
|---|---|
| 10152386 | Sensofix series 30 |
| 10163979 | Converter 3-point (M12) |
| for details: see accessories section | |

| order reference | adjustment | output circuit | output signal | connection types |
|---|---|---|---|---|
| **UNDK 30I6103** | Teach-in | current output | 4 ... 20 mA / 20 ... 4 mA | cable, 2 m |
| **UNDK 30I6103/S14** | Teach-in | current output | 4 ... 20 mA / 20 ... 4 mA | connector M12 |
| **UNDK 30U6103** | Teach-in | voltage output | 0 ... 10 V / 10 ... 0 V | cable, 2 m |
| **UNDK 30U6103/S14** | Teach-in | voltage output | 0 ... 10 V / 10 ... 0 V | connector M12 |
| **UNDK 30U9103** | potentiometer | voltage output | 0 ... 10 VDC | cable, 2 m |
| **UNDK 30U9103/S14** | potentiometer | voltage output | 0 ... 10 VDC | connector M12 |

# Sd = 2000 mm

- Teach-in
- 0 ... 10 V / 4 ... 20 mA
- output signals invertible

| general data | |
|---|---|
| scanning range sd | 200 ... 2000 mm |
| scanning range close limit Sdc | 200 ... 2000 mm |
| scanning range far limit Sde | 200 ... 2000 mm |
| repeat accuracy | < 1 mm |
| resolution | < 0,5 mm |
| adjustment | Teach-in |
| sonic frequency | 200 kHz |
| response time ton | < 150 ms |
| release time toff | < 150 ms |
| alignment aid | target indication flashing |
| light indicator | yellow LED / red LED |
| temperature drift | < 2 % of distance to target So |
| **electrical data** | |
| voltage supply range +Vs | 15 ... 30 VDC |
| output current | < 20 mA |
| residual ripple | < 10 % Vs |
| short circuit protection | yes |
| reverse polarity protection | yes |
| **voltage output** | |
| current consumption max. (no load) | 35 mA |
| output signal | 0 ... 10 V / 10 ... 0 V |
| **current output** | |
| current consumption max. (no load) | 55 mA |
| output signal | 4 ... 20 mA / 20 ... 4 mA |
| load resistance +Vs max. | < 1100 Ohm |
| load resistance +Vs min. | < 400 Ohm |
| **mechanical data** | |
| type | rectangular |
| housing material | polyester / die-cast zinc |
| width / diameter | 30 mm |
| height / length | 65 mm |
| depth | 31 mm |
| **ambient conditions** | |
| operating temperature | -10 ... +60 °C |
| protection class | IP 67 |

| order reference | output circuit | connection types |
|---|---|---|
| **UNDK 30I6104/S14** | current output | connector M12 |
| **UNDK 30U6104** | voltage output | cable, 2 m |
| **UNDK 30U6104/S14** | voltage output | connector M12 |

## dimension drawings

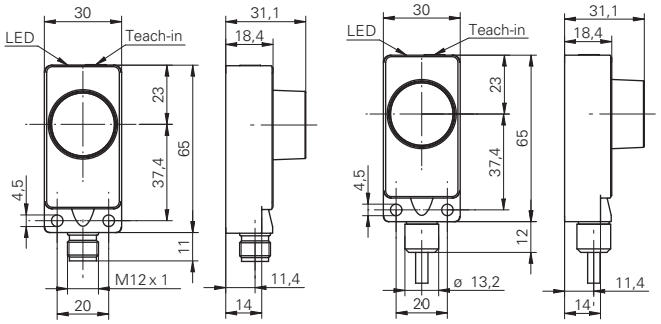


## connection diagram

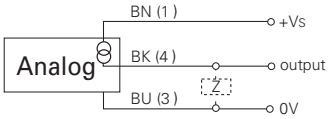


## typical sonic cone profile

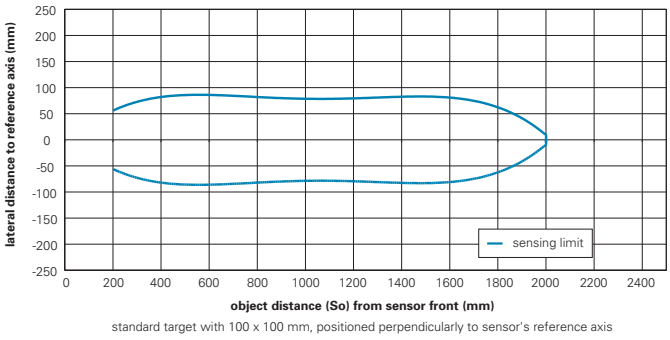


standard target with 100 x 100 mm, positioned perpendicularly to sensor's reference axis

## connectors and mating connectors

| | |
|---|---|
| ESG 34AH0200 | Connector M12, 4 pin, straight, 2 m |
| ESW 33AH0200 | Connector M12, 4 pin, angular, 2 m |

additional cable connectors and field wireable connectors: see accessories

## Accessories

| | |
|---|---|
| 10152386 | Sensofix series 30 |
| 10163979 | Converter 3-point (M12) |

for details: see accessories section

# Sd = 82 mm

- external Teach-in
- with beam columnator for measurement in very small containers

| general data | |
|---|---|
| scanning range sd | 2 ... 82 mm |
| scanning range close limit Sdc | 2 ... 82 mm |
| scanning range far limit Sde | 2 ... 82 mm |
| repeat accuracy | < 0,5 mm |
| resolution | < 0,3 mm |
| adjustment | external Teach-in |
| sonic frequency | 380 kHz |
| response time ton | < 30 ms |
| release time toff | < 30 ms |
| alignment aid | target indication flashing |
| light indicator | yellow LED / red LED |
| temperature drift | < 2 % of distance to target So |
| **electrical data** | |
| voltage supply range +Vs | 15 ... 30 VDC |
| current consumption max. (no load) | 35 mA |
| output circuit | voltage output |
| output signal | 0 ... 10 V / 10 ... 0 V |
| output current | < 20 mA |
| residual ripple | < 10 % Vs |
| short circuit protection | yes |
| reverse polarity protection | yes |
| **mechanical data** | |
| type | cylindrical threaded |
| housing material | brass nickel plated |
| width / diameter | 12 mm |
| height / length | 88 mm |
| connection types | connector M12 |
| **ambient conditions** | |
| operating temperature | -10 ... +60 °C |
| protection class | IP 67 |

| order reference |
|---|
| **UNAM 12U9914/S14D** |

## dimension drawing

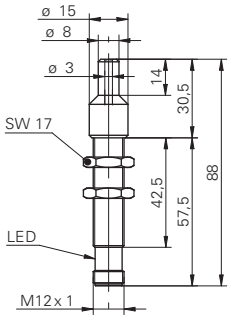


## connection diagram

## typical sonic cone profile

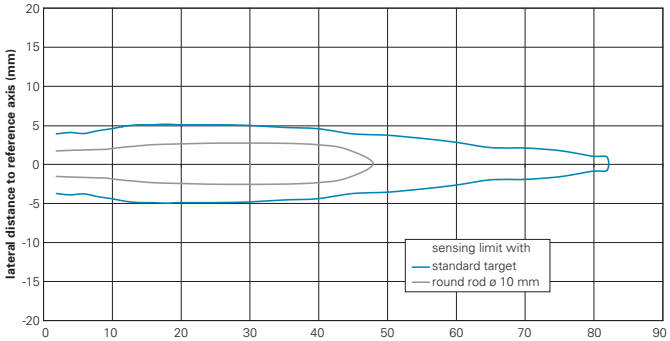


standard target 15 x 15 mm and round rod ø 10 mm, directecd rectangular to sensor's reference axis

| connectors and mating connectors | |
|---|---|
| ESG 34AH0200 | Connector M12, 4 pin, straight, 2 m |
| ESW 33AH0200 | Connector M12, 4 pin, angular, 2 m |
| additional cable connectors and field wireable connectors: see accessories | |

| Accessories | |
|---|---|
| 10151720 | Sensofix series 12 round |
| 10141584 | Teach-in Adapter M12 |
| 10163979 | Converter 3-point (M12) |
| for details: see accessories section | |

# Sd = 200 mm

- external Teach-in
- 0 ... 10 V / 0 ... 10 mA invertible
- Teach-in adapter

| general data | |
|---|---|
| scanning range sd | 20 ... 200 mm |
| scanning range close limit Sdc | 20 ... 200 mm |
| scanning range far limit Sde | 20 ... 200 mm |
| repeat accuracy | < 0,5 mm |
| resolution | < 0,3 mm |
| adjustment | external Teach-in |
| sonic frequency | 380 kHz |
| response time ton | < 30 ms |
| release time toff | < 30 ms |
| alignment aid | target indication flashing |
| light indicator | yellow LED / red LED |
| temperature drift | < 2 % of distance to target So |
| **electrical data** | |
| voltage supply range +Vs | 15 ... 30 VDC |
| output current | < 20 mA |
| residual ripple | < 10 % Vs |
| short circuit protection | yes |
| reverse polarity protection | yes |
| **voltage output** | |
| current consumption max. (no load) | 35 mA |
| output signal | 0 ... 10 V / 10 ... 0 V |
| **current output** | |
| current consumption max. (no load) | 45 mA |
| output signal | 0 ... 10 mA / 10 ... 0 mA |
| load resistance +Vs max. | < 1100 Ohm |
| load resistance +Vs min. | < 400 Ohm |
| **mechanical data** | |
| type | cylindrical threaded |
| housing material | brass nickel plated |
| width / diameter | 12 mm |
| height / length | 70 mm |
| connection types | connector M12 |
| **ambient conditions** | |
| operating temperature | -10 ... +60 °C |
| protection class | IP 67 |

| order reference | output circuit |
|---|---|
| **UNAM 12I9914/S14** | current output |
| **UNAM 12U9914/S14** | voltage output |

## dimension drawing

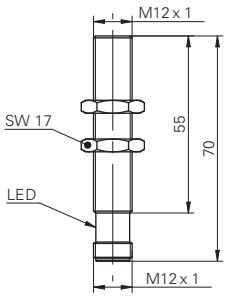


## connection diagram

## typical sonic cone profile

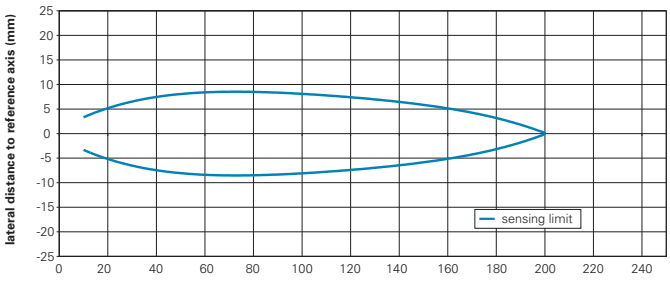


standard square target, size 15 x 15 mm, positioned perpendicularly to sensor's reference axis

| connectors and mating connectors | |
|---|---|
| ESG 34AH0200 | Connector M12, 4 pin, straight, 2 m |
| ESW 33AH0200 | Connector M12, 4 pin, angular, 2 m |
| additional cable connectors and field wireable connectors: see accessories | |

| Accessories | |
|---|---|
| 10151720 | Sensofix series 12 round |
| 10141584 | Teach-in Adapter M12 |
| 10163979 | Converter 3-point (M12) |
| for details: see accessories section | |

# Sd = 400 mm

- external Teach-in
- 0 ... 10 V / 0 ... 10 mA invertible
- Teach-in adapter

| general data | |
|---|---|
| scanning range sd | 60 ... 400 mm |
| scanning range close limit Sdc | 60 ... 400 mm |
| scanning range far limit Sde | 60 ... 400 mm |
| repeat accuracy | < 0,5 mm |
| resolution | < 0,3 mm |
| adjustment | external Teach-in |
| sonic frequency | 290 kHz |
| response time ton | < 60 ms |
| release time toff | < 60 ms |
| alignment aid | target indication flashing |
| light indicator | yellow LED / red LED |
| temperature drift | < 2 % of distance to target So |
| **electrical data** | |
| voltage supply range +Vs | 15 ... 30 VDC |
| output current | < 20 mA |
| residual ripple | < 10 % Vs |
| short circuit protection | yes |
| reverse polarity protection | yes |
| **voltage output** | |
| current consumption max. (no load) | 35 mA |
| output signal | 0 ... 10 V / 10 ... 0 V |
| **current output** | |
| current consumption max. (no load) | 45 mA |
| output signal | 0 ... 10 mA / 10 ... 0 mA |
| load resistance +Vs max. | < 1100 Ohm |
| load resistance +Vs min. | < 400 Ohm |
| **mechanical data** | |
| type | cylindrical threaded |
| housing material | brass nickel plated |
| width / diameter | 12 mm |
| height / length | 70 mm |
| connection types | connector M12 |
| **ambient conditions** | |
| operating temperature | -10 ... +60 °C |
| protection class | IP 67 |

| order reference | output circuit |
|---|---|
| **UNAM 12I9912/S14** | current output |
| **UNAM 12U9912/S14** | voltage output |

## dimension drawing

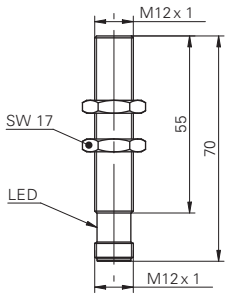


## connection diagram

## typical sonic cone profile

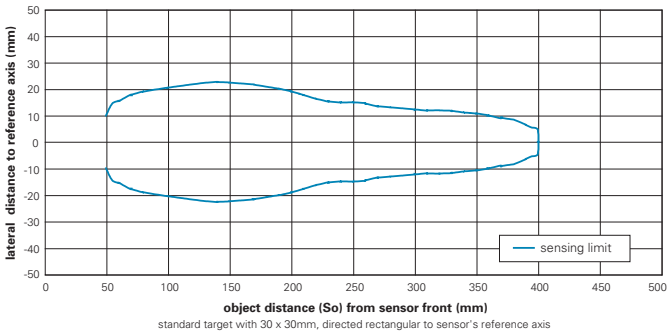


| connectors and mating connectors | |
|---|---|
| ESG 34AH0200 | Connector M12, 4 pin, straight, 2 m |
| ESW 33AH0200 | Connector M12, 4 pin, angular, 2 m |
| additional cable connectors and field wireable connectors: see accessories | |

| Accessories | |
|---|---|
| 10151720 | Sensofix series 12 round |
| 10141584 | Teach-in Adapter M12 |
| 10163979 | Converter 3-point (M12) |
| for details: see accessories section | |

## Sd = 1000 mm

- internal and external Teach-in
- 0 ... 10 V / 4 ... 20 mA
- output signals invertible

| general data | |
|---|---|
| scanning range sd | 100 ... 1000 mm |
| scanning range close limit Sdc | 100 ... 1000 mm |
| scanning range far limit Sde | 100 ... 1000 mm |
| repeat accuracy | < 0,5 mm |
| resolution | < 0,3 mm |
| adjustment | Teach-in |
| sonic frequency | 240 kHz |
| response time ton | < 80 ms |
| release time toff | < 80 ms |
| alignment aid | target indication flashing |
| light indicator | yellow LED / red LED |
| temperature drift | < 2 % of distance to target So |
| **electrical data** | |
| voltage supply range +Vs | 15 ... 30 VDC |
| output current | < 20 mA |
| residual ripple | < 10 % Vs |
| short circuit protection | yes |
| reverse polarity protection | yes |
| **voltage output** | |
| current consumption max. (no load) | 35 mA |
| output signal | 0 ... 10 V / 10 ... 0 V |
| **current output** | |
| current consumption max. (no load) | 55 mA |
| output signal | 4 ... 20 mA / 20 ... 4 mA |
| load resistance +Vs max. | < 1100 Ohm |
| load resistance +Vs min. | < 400 Ohm |
| **mechanical data** | |
| type | cylindrical threaded |
| housing material | brass nickel plated |
| width / diameter | 18 mm |
| height / length | 90 mm |
| connection types | connector M12 |
| **ambient conditions** | |
| operating temperature | -10 ... +60 °C |
| protection class | IP 67 |

| order reference | output circuit |
|---|---|
| **UNAM 18I6903/S14** | current output |
| **UNAM 18U6903/S14** | voltage output |

### dimension drawing

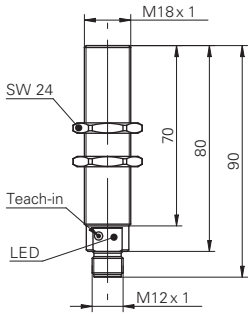


### connection diagram

### typical sonic cone profile

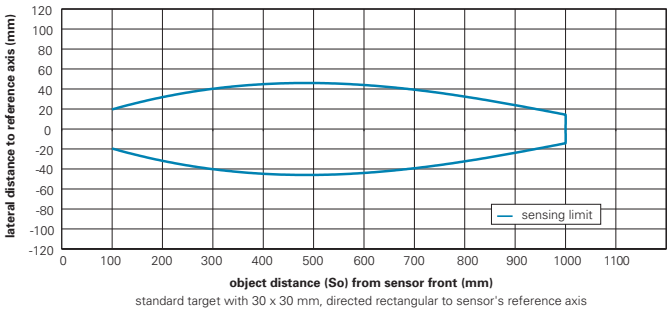


standard target with 30 x 30 mm, directed rectangular to sensor's reference axis

| connectors and mating connectors | |
|---|---|
| ESG 34AH0200 | Connector M12, 4 pin, straight, 2 m |
| ESW 33AH0200 | Connector M12, 4 pin, angular, 2 m |
| additional cable connectors and field wireable connectors: see accessories | |

| Accessories | |
|---|---|
| 10151658 | Sensofix series 18 |
| 10164264 | Sonic beam deflector series 18 rectangular |
| 10163979 | Converter 3-point (M12) |
| for details: see accessories section | |

## Sd = 400 mm

- internal and external Teach-in
- sensorfront chemically resistant
- stainless steel housing

| general data | |
|---|---|
| special type | chemically resistant |
| scanning range sd | 60 ... 400 mm |
| scanning range close limit Sdc | 60 ... 400 mm |
| scanning range far limit Sde | 60 ... 400 mm |
| repeat accuracy | < 0,5 mm |
| resolution | < 0,3 mm |
| adjustment | Teach-in |
| sonic frequency | 400 kHz |
| response time ton | < 60 ms |
| release time toff | < 60 ms |
| alignment aid | target indication flashing |
| light indicator | yellow LED / red LED |
| temperature drift | < 2 % of distance to target So |
| **electrical data** | |
| voltage supply range +Vs | 15 ... 30 VDC |
| output current | < 20 mA |
| residual ripple | < 10 % Vs |
| short circuit protection | yes |
| reverse polarity protection | yes |
| **voltage output** | |
| current consumption max. (no load) | 35 mA |
| output signal | 0 ... 10 V / 10 ... 0 V |
| **current output** | |
| current consumption max. (no load) | 55 mA |
| output signal | 4 ... 20 mA / 20 ... 4 mA |
| load resistance +Vs max. | < 1100 Ohm |
| load resistance +Vs min. | < 400 Ohm |
| **mechanical data** | |
| type | cylindrical threaded |
| housing material | stainless steel 1.4435 (V4A) |
| coating active face | Parylene |
| material O-ring | FFKM |
| front of sensor durable against pressure | 6 bar, 20'000 cycle |
| width / diameter | 18 mm |
| height / length | 91,5 mm |
| connection types | connector M12 |
| **ambient conditions** | |
| operating temperature | 0 ... +60 °C |
| protection class | IP 67 |

| order reference | output circuit |
|---|---|
| **UNAR 18I6912/S14G** | current output |
| **UNAR 18U6912/S14G** | voltage output |

### dimension drawing

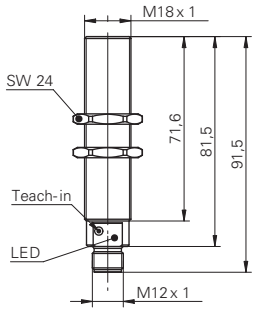


### connection diagram

### typical sonic cone profile

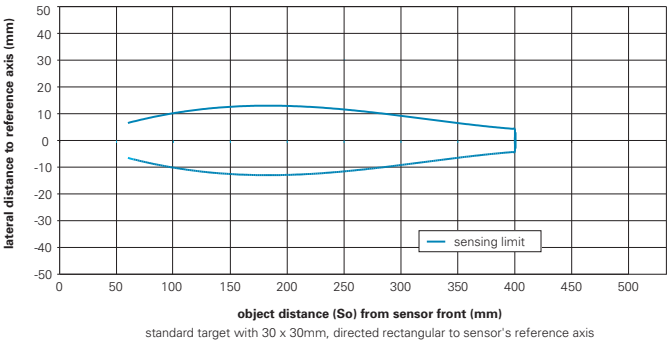


standard target with 30 x 30mm, directed rectangular to sensor's reference axis

| connectors and mating connectors | |
|---|---|
| ESG 34AH0200 | Connector M12, 4 pin, straight, 2 m |
| ESW 33AH0200 | Connector M12, 4 pin, angular, 2 m |
| additional cable connectors and field wireable connectors: see accessories | |

| Accessories | |
|---|---|
| 10151658 | Sensofix series 18 |
| 10164264 | Sonic beam deflector series 18 rectangular |
| 10163979 | Converter 3-point (M12) |
| for details: see accessories section | |

## Sd = 1000 mm

- internal and external Teach-in
- sensorfront chemically resistant
- stainless steel housing

| general data | |
|---|---|
| special type | chemically resistant |
| scanning range sd | 100 ... 1000 mm |
| scanning range close limit Sdc | 100 ... 1000 mm |
| scanning range far limit Sde | 100 ... 1000 mm |
| repeat accuracy | < 0,5 mm |
| resolution | < 0,3 mm |
| adjustment | Teach-in |
| sonic frequency | 240 kHz |
| response time ton | < 80 ms |
| release time toff | < 80 ms |
| alignment aid | target indication flashing |
| light indicator | yellow LED / red LED |
| temperature drift | < 2 % of distance to target So |
| **electrical data** | |
| voltage supply range +Vs | 15 ... 30 VDC |
| output current | < 20 mA |
| residual ripple | < 10 % Vs |
| short circuit protection | yes |
| reverse polarity protection | yes |
| **voltage output** | |
| current consumption max. (no load) | 35 mA |
| output signal | 0 ... 10 V / 10 ... 0 V |
| **current output** | |
| current consumption max. (no load) | 55 mA |
| output signal | 4 ... 20 mA / 20 ... 4 mA |
| load resistance +Vs max. | < 1100 Ohm |
| load resistance +Vs min. | < 400 Ohm |
| **mechanical data** | |
| type | cylindrical threaded |
| housing material | stainless steel 1.4435 (V4A) |
| coating active face | Parylene |
| material O-ring | FFKM |
| front of sensor durable against pressure | 6 bar, 20'000 cycle |
| width / diameter | 18 mm |
| height / length | 91,5 mm |
| connection types | connector M12 |
| **ambient conditions** | |
| operating temperature | 0 ... +60 °C |
| protection class | IP 67 |

| order reference | output circuit |
|---|---|
| UNAR 18I6903/S14G | current output |
| UNAR 18U6903/S14G | voltage output |

### dimension drawing

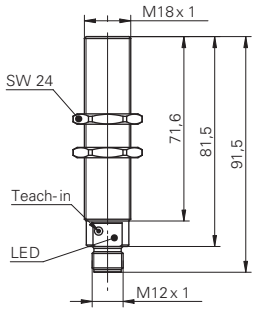


### connection diagram

### typical sonic cone profile

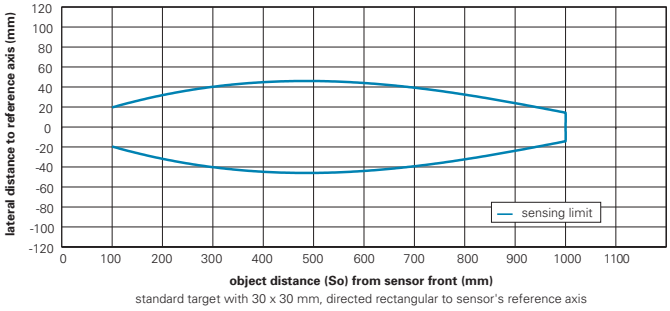


standard target with 30 x 30 mm, directed rectangular to sensor's reference axis

| connectors and mating connectors | |
|---|---|
| ESG 34AH0200 | Connector M12, 4 pin, straight, 2 m |
| ESW 33AH0200 | Connector M12, 4 pin, angular, 2 m |
| additional cable connectors and field wireable connectors: see accessories | |

| Accessories | |
|---|---|
| 10151658 | Sensofix series 18 |
| 10164264 | Sonic beam deflector series 18 rectangular |
| 10163979 | Converter 3-point (M12) |
| for details: see accessories section | |

## Sd = 1000 mm

- Teach-in or potentiometer
- 0 ... 10 V / 4 ... 20 mA
- signals of Teach-in version invertible

| general data | |
|---|---|
| scanning range sd | 100 ... 1000 mm |
| scanning range far limit Sde | 100 ... 1000 mm |
| repeat accuracy | < 0,5 mm |
| resolution | < 0,3 mm |
| sonic frequency | 240 kHz |
| response time ton | < 80 ms |
| release time toff | < 80 ms |
| alignment aid | target indication flashing |
| temperature drift | < 2 % of distance to target So |
| **potentiometer** | |
| light indicator | LED green |
| **Teach-in** | |
| scanning range close limit Sdc | 100 ... 1000 mm |
| light indicator | yellow LED / red LED |
| **electrical data** | |
| voltage supply range +Vs | 15 ... 30 VDC |
| output current | < 20 mA |
| residual ripple | < 10 % Vs |
| short circuit protection | yes |
| reverse polarity protection | yes |
| **voltage output** | |
| current consumption max. (no load) | 35 mA |
| **current output** | |
| current consumption max. (no load) | 55 mA |
| load resistance +Vs max. | < 1100 Ohm |
| load resistance +Vs min. | < 400 Ohm |
| **mechanical data** | |
| type | cylindrical threaded |
| housing material | brass nickel plated |
| width / diameter | 30 mm |
| height / length | 70 mm |
| **ambient conditions** | |
| operating temperature | -10 ... +60 °C |
| protection class | IP 67 |

### dimension drawings

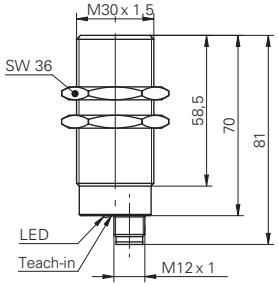


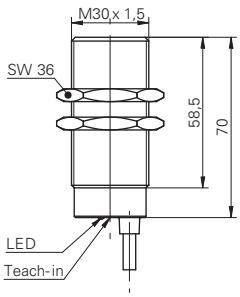


Teach-in = Teach-in or potentiometer

### connection diagram

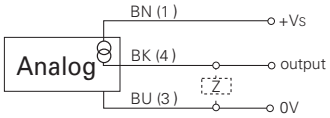


### typical sonic cone profile

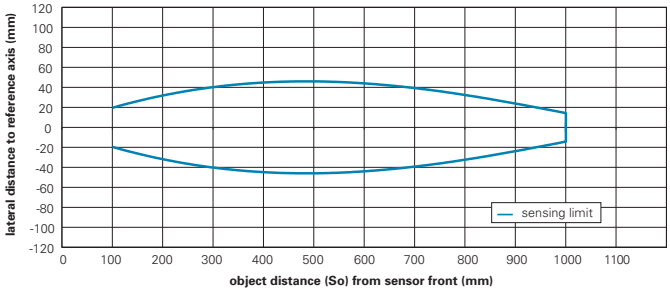


standard target with 30 x 30 mm, directed rectangular to sensor's reference axis

| connectors and mating connectors | |
|---|---|
| ESG 34SH0200 | Connector M12, 3 pin, straight, 2 m |
| ESW 33SH0200 | Connector M12, 3 pin, angular, 2 m |
| additional cable connectors and field wireable connectors: see accessories | |

| Accessories | |
|---|---|
| 10163979 | Converter 3-point (M12) |
| for details: see accessories section | |

| order reference | version | adjustment | output circuit | output signal | connection types |
|---|---|---|---|---|---|
| **UNAM 30I6103** | standard | Teach-in | current output | 4 ... 20 mA / 20 ... 4 mA | cable, 2 m |
| **UNAM 30I6103/S14** | standard | Teach-in | current output | 4 ... 20 mA / 20 ... 4 mA | connector M12 |
| **UNAM 30I6803/S14** | multiplex version | Teach-in | current output | 4 ... 20 mA / 20 ... 4 mA | connector M12 |
| **UNAM 30U6103** | standard | Teach-in | voltage output | 0 ... 10 V / 10 ... 0 V | cable, 2 m |
| **UNAM 30U6103/S14** | standard | Teach-in | voltage output | 0 ... 10 V / 10 ... 0 V | connector M12 |
| **UNAM 30U9103** | standard | potentiometer | voltage output | 0 ... 10 VDC | cable, 2 m |
| **UNAM 30U9103/S14** | standard | potentiometer | voltage output | 0 ... 10 VDC | connector M12 |

## Sd = 2500 mm

- Teach-in or potentiometer
- 0 ... 10 V / 4 ... 20 mA
- signals of Teach-in version invertible

| general data | |
|---|---|
| scanning range sd | 400 ... 2500 mm |
| scanning range close limit Sdc | 400 ... 2500 mm |
| scanning range far limit Sde | 400 ... 2500 mm |
| repeat accuracy | < 1 mm |
| resolution | < 0,3 mm |
| adjustment | Teach-in |
| sonic frequency | 120 kHz |
| response time ton | < 160 ms |
| release time toff | < 160 ms |
| alignment aid | target indication flashing |
| light indicator | yellow LED / red LED |
| temperature drift | < 2 % of distance to target So |
| **electrical data** | |
| voltage supply range +Vs | 15 ... 30 VDC |
| output current | < 20 mA |
| residual ripple | < 10 % Vs |
| short circuit protection | yes |
| reverse polarity protection | yes |
| **voltage output** | |
| current consumption max. (no load) | 35 mA |
| output signal | 0 ... 10 V / 10 ... 0 V |
| **current output** | |
| current consumption max. (no load) | 55 mA |
| output signal | 4 ... 20 mA / 20 ... 4 mA |
| load resistance +Vs max. | < 1100 Ohm |
| load resistance +Vs min. | < 400 Ohm |
| **mechanical data** | |
| type | cylindrical threaded |
| housing material | brass nickel plated |
| width / diameter | 30 mm |
| height / length | 95 mm |
| **ambient conditions** | |
| operating temperature | -10 ... +60 °C |
| protection class | IP 67 |

| order reference | output circuit | connection types |
|---|---|---|
| **UNAM 50I6121** | current output | cable, 2 m |
| **UNAM 50I6121/S14** | current output | connector M12 |
| **UNAM 50U6121** | voltage output | cable, 2 m |
| **UNAM 50U6121/S14** | voltage output | connector M12 |

### dimension drawings

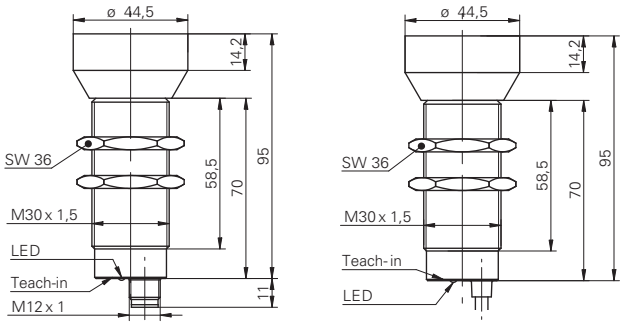


Teach-in = Teach-in or potentiometer

### connection diagram

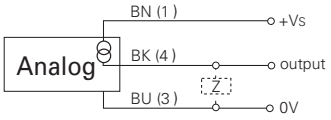


### typical sonic cone profile

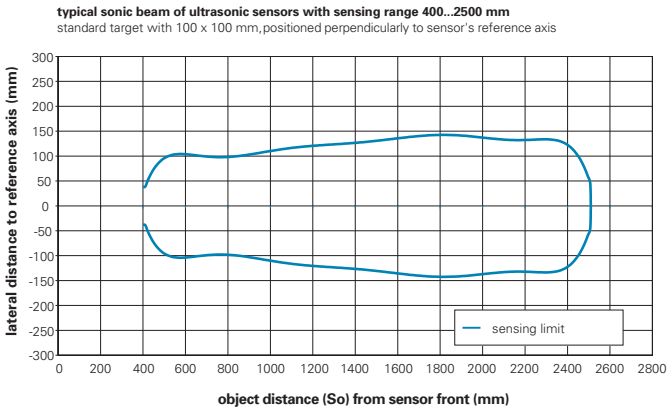


| connectors and mating connectors | |
|---|---|
| ESG 34SH0200 | Connector M12, 3 pin, straight, 2 m |
| ESW 33SH0200 | Connector M12, 3 pin, angular, 2 m |
| additional cable connectors and field wireable connectors: see accessories | |

| Accessories | |
|---|---|
| 10163979 | Converter 3-point (M12) |
| for details: see accessories section | |

# Ultrasonic proximity sensors

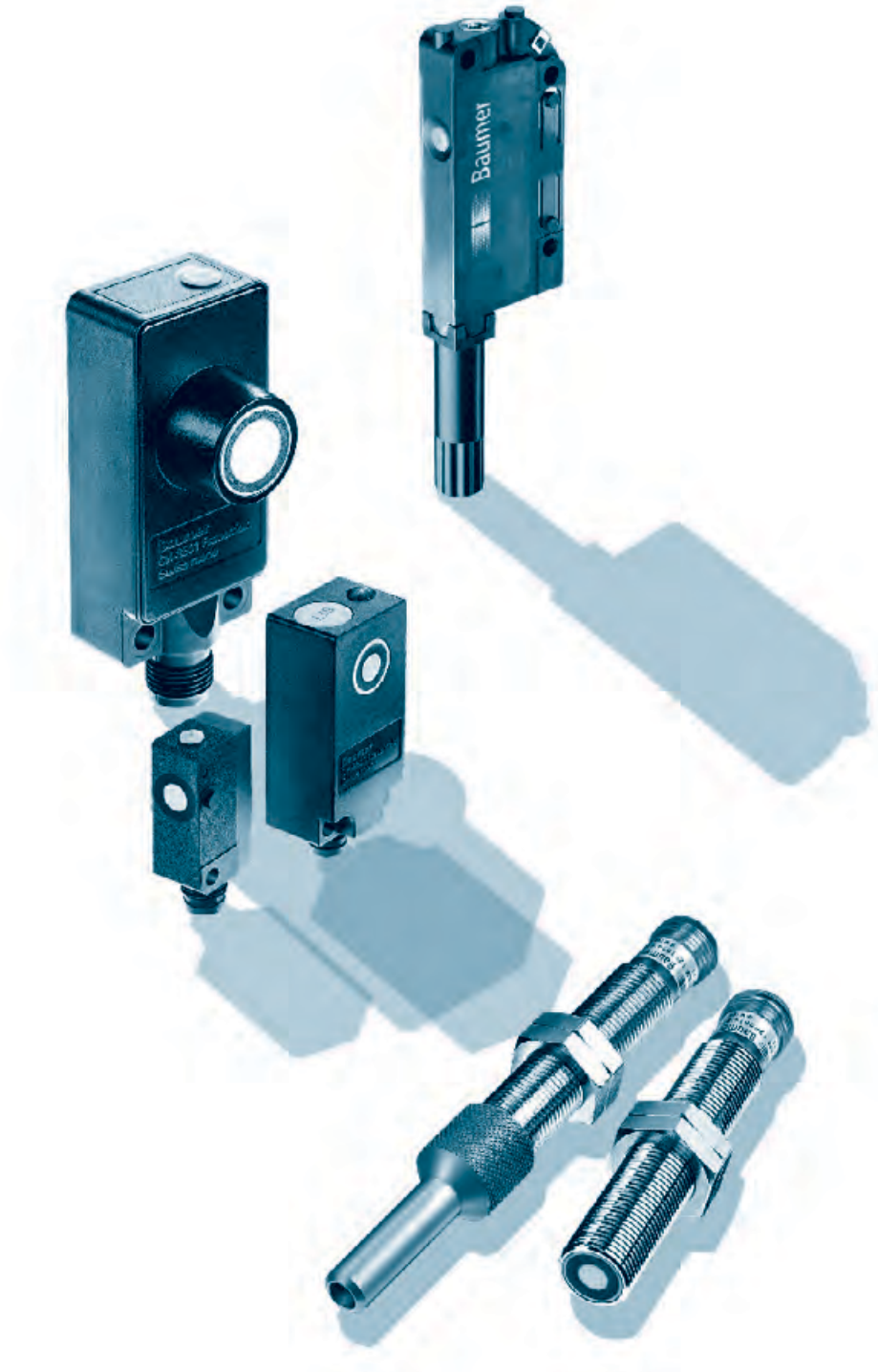



| | |
|---|---|
| Introduction | Page 54 |
| Overview | Page 56 |
| Rectangular designs | Page 58 |
| Cylindrical designs | Page 69 |

## Design and operation

A special sonic transducer is used for the ultrasonic proximity sensors, which allows for alternate transmission and reception of sound waves. The transducer emits a number of sonic waves which are reflected by an object, back to the transducer. After emission of the sound waves, the ultrasonic sensor will switch to receive mode. The time elapsed between emitting and receiving is proportional to the distance of the object from the sensor.

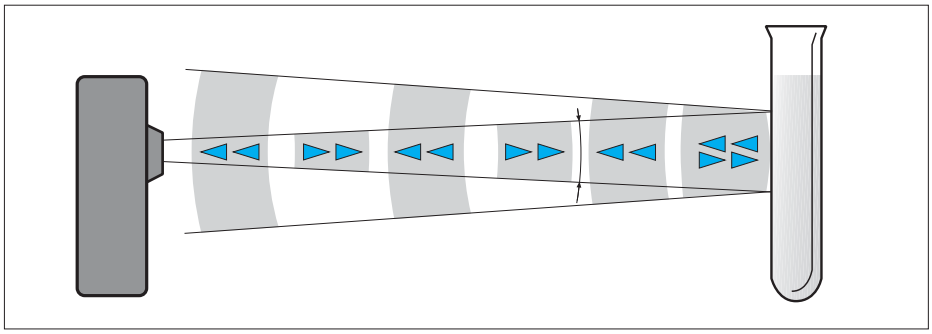

**Digital output**

Sensing is only possible within the detection area. The required sensing range can be adjusted with the sensor's potentiometer. If an object is detected within the set area, the output changes its state. The built-in LED indicates this change.

## ... with Teach-in

**Teach-in procedures**

All adjustments are carried out via the internal Teach-in button or the external Teach-in wire.

**Adjustment switching point Sde**

1. Adjustment mode:
   Press the Teach-in button or connect the white Teach-in wire to +Vs for approx. 2 secs until the LED flashes green. Release the button or disconnect Teach-in wire.
2. LED flashes green. Place the target at the required scanning range and press the Teach-in button or connect the external white Teach-in wire shortly to +Vs.
3. Succesful completion of Teach-in procedure is confirmed by LED being „on“ for approx. 2 secs.

**Teach-in lock**

The Teach-in function is locked five minutes after power up or five minutes after the end of the last Teach-in process.

**Resetting to original factory settings**

Holding the button down or connecting the white Teach-in wire to +Vs for > 6 secs, will automatically restore the original factory setting. Fast flashing of the LED indicates successful completion of the resetting.

Baumer

## rectangular designs

| product family | UNCK 09 | UNCK 09 | UNDK 09 | UNDK 09 | UNDK 10 | UNDK 20 | UNDK 20 |
|---|---|---|---|---|---|---|---|
| | | | | | | | |
| | | | | | *SONUS* | | |
| width / diameter | 8,6 mm | 8,6 mm | 8,6 mm | 8,6 mm | 10,4 mm | 20 mm | 20 mm |
| scanning range sd | 30 ... 200 mm | 3 ... 150 mm | 30 ... 200 mm | 3 ... 150 mm | 10 ... 200 mm | 10 ... 200 mm | 40 ... 400 mm |
| potentiometer | | | | | | | |
| Teach-in | ■ | ■ | ■ | ■ | ■ | ■ | ■ |
| repeat accuracy | < 0,5 mm | < 0,5 mm | < 0,5 mm | < 0,5 mm | < 0,5 mm | < 0,5 mm | < 0,5 mm |
| operating temperature | 0 ... +60 °C | 0 ... +60 °C | 0 ... +60 °C | 0 ... +60 °C | -10 ... +60 °C | -10 ... +60 °C | -10 ... +60 °C |
| housing material | PA 12 | PA 12 | PA 12 | PA 12 | plastic (ASA) | polyester | polyester |
| cable PUR 4 x 0,08, 2 m | ■ | ■ | ■ | ■ | | | |
| cable, 2 m | | | | | ■ | | |
| flylead connector M8, L=200 mm | ■ | ■ | ■ | ■ | ■ | | |
| connector M8 | | | | | ■ | ■ | ■ |
| connector M12 | | | | | | | |
| **page** | **58** | **59** | **60** | **61** | **62** | **63** | **64** |

## cylindrical designs

| product family | UNAM 12 | UNAM 12 | UNAM 12 | UNAM 12 | UNAM 12 | UNAM 18 | UNAM 18 |
|---|---|---|---|---|---|---|---|
| | | | | | | | |
| special type | Highspeed | | Highspeed | | | | |
| width / diameter | 12 mm | 12 mm | 12 mm | 12 mm | 12 mm | 18 mm | 18 mm |
| scanning range sd | 0 ... 40 mm | 5 ... 70 mm | 10 ... 70 mm | 10 ... 200 mm | 40 ... 400 mm | 100 ... 700 mm | 100 ... 1000 mm |
| potentiometer | | | | | | ■ | |
| external Teach-in | ■ | ■ | ■ | ■ | ■ | | |
| Teach-in | | | | | | | ■ |
| repeat accuracy | < 0,5 mm | < 0,5 mm | < 0,5 mm | < 0,5 mm | < 0,5 mm | < 0,5 mm | < 0,5 mm |
| operating temperature | -10 ... +60 °C | 0 ... +60 °C | -10 ... +60 °C | -10 ... +60 °C | -10 ... +60 °C | -10 ... +60 °C | -10 ... +60 °C |
| housing material | brass nickel plated | brass nickel plated | brass nickel plated | brass nickel plated | brass nickel plated | brass nickel plated | brass nickel plated |
| cable, 2 m | | | | | | ■ | |
| connector M12 | ■ | ■ | ■ | ■ | ■ | | ■ |
| **page** | **69** | **70** | **71** | **72** | **73** | **74** | **75** |

| UNDK 20 | UNDK 30 | UNDK 30 | UNDK 30 |
|---|---|---|---|
| | | | |
| | | | |
| 20 mm | 30 mm | 30 mm | 30 mm |
| 100 ... 1000 mm | 30 ... 250 mm | 60 ... 400 mm | 100 ... 1000 mm |
| | ■ | ■ | ■ |
| ■ | | | |
| < 0,5 mm | < 0,5 mm | < 0,5 mm | < 0,5 mm |
| -10 ... +60 °C | -25 ... +60 °C | -25 ... +60 °C | -10 ... +60 °C |
| polyester | polyester / die-cast zinc | polyester / die-cast zinc | polyester / die-cast zinc |
| | | | |
| | ■ | ■ | ■ |
| | | | |
| ■ | | | |
| | ■ | ■ | ■ |
| **65** | **66** | **67** | **68** |

| UNAR 18 | UNAR 18 | UNAM 30 | UNAM 50 |
|---|---|---|---|
| | | | |
| chemically resistant | chemically resistant | | |
| 18 mm | 18 mm | 30 mm | 30 mm |
| 60 ... 400 mm | 100 ... 1000 mm | 200 ... 1500 mm | 350 ... 2500 mm |
| | | ■ | ■ |
| | | | |
| ■ | ■ | | |
| < 0,5 mm | < 0,5 mm | < 1 mm | < 1 mm |
| 0 ... +60 °C | 0 ... +60 °C | -25 ... +60 °C | -25 ... +60 °C |
| stainless steel 1.4435 (V4A) | stainless steel 1.4435 (V4A) | brass nickel plated | brass nickel plated |
| | | ■ | ■ |
| ■ | ■ | ■ | ■ |
| **76** | **77** | **78** | **79** |

# Sd = 200 mm

- short response time
- high resolution
- detects the smallest objects

| general data | |
|---|---|
| scanning range sd | 30 ... 200 mm |
| scanning range far limit Sde | 30 ... 200 mm |
| hysteresis typ. | 4 % Sde |
| repeat accuracy | < 0,5 mm |
| temperature drift | < 0,18 % Sde/K |
| adjustment | Teach-in |
| response time ton | < 7 ms |
| release time toff | < 7 ms |
| alignment aid | target indication flashing |
| sonic frequency | 380 kHz |
| output indicator | green LED / red LED |
| **electrical data** | |
| voltage supply range +Vs | 12 ... 30 VDC |
| current consumption max. (no load) | 35 mA |
| output circuit | push-pull |
| output current | < 100 mA |
| voltage drop Vd | < 2 VDC |
| residual ripple | < 10 % Vs |
| short circuit protection | yes |
| reverse polarity protection | yes |
| **mechanical data** | |
| type | rectangular |
| housing material | PA 12 |
| width / diameter | 8,6 mm |
| height / length | 55 mm |
| depth | 24,5 mm |
| **ambient conditions** | |
| operating temperature | 0 ... +60 °C |
| protection class | IP 67 |

| connectors and mating connectors | |
|---|---|
| ESG 32AH0200 | Connector M8, 4 pin, straight, 2 m |
| ESW 31AH0200 | Connector M8, 4 pin, angular, 2 m |
| additional cable connectors and field wireable connectors: see accessories | |

| order reference | connection types |
|---|---|
| UNCK 09G8914 | cable PUR 4 x 0,08, 2 m |
| UNCK 09G8914/KS35A | flylead connector M8, L=200 mm |

## dimension drawing

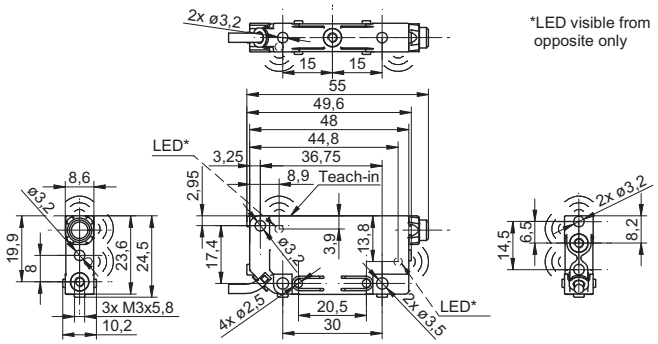


## flylead connector version

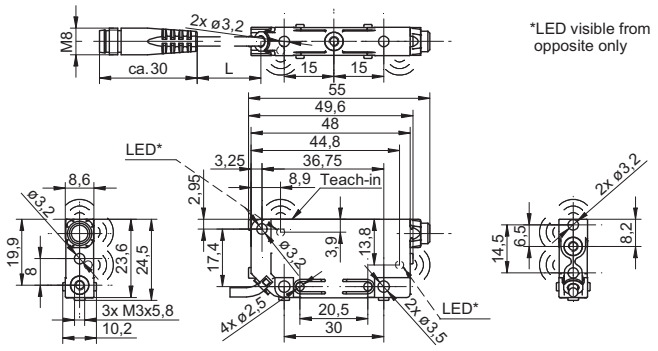


standard cable length 200 mm (L)

## connection diagram

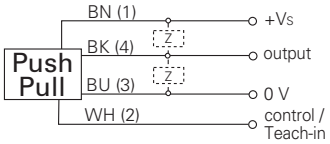


## typical sonic cone profile

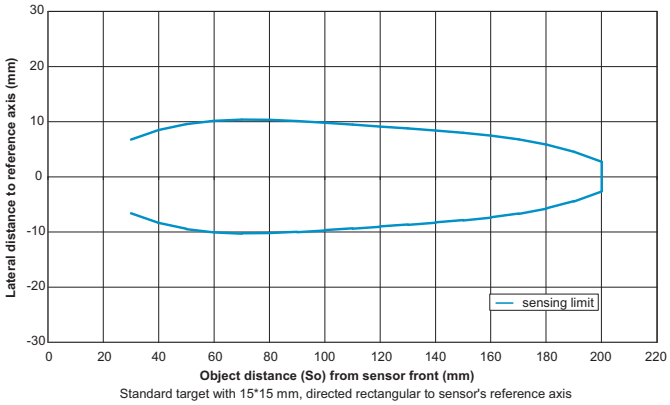


Standard target with 15*15 mm, directed rectangular to sensor's reference axis

# Sd = 150 mm

- measurement in very small containers
- stackability in a 9 mm pitch
- short response time

| general data | |
|---|---|
| scanning range sd | 3 ... 150 mm |
| scanning range far limit Sde | 3 ... 150 mm |
| hysteresis typ. | 4 % Sde |
| repeat accuracy | < 0,5 mm |
| temperature drift | < 0,18 % Sde/K |
| adjustment | Teach-in |
| response time ton | < 7 ms |
| release time toff | < 7 ms |
| alignment aid | target indication flashing |
| sonic frequency | 380 kHz |
| output indicator | green LED / red LED |
| **electrical data** | |
| voltage supply range +Vs | 12 ... 30 VDC |
| current consumption max. (no load) | 35 mA |
| output circuit | push-pull |
| output current | < 100 mA |
| voltage drop Vd | < 2 VDC |
| residual ripple | < 10 % Vs |
| short circuit protection | yes |
| reverse polarity protection | yes |
| **mechanical data** | |
| type | rectangular |
| housing material | PA 12 |
| width / diameter | 8,6 mm |
| height / length | 82 mm |
| depth | 24,5 mm |
| **ambient conditions** | |
| operating temperature | 0 ... +60 °C |
| protection class | IP 67 |

| connectors and mating connectors | |
|---|---|
| ESG 32AH0200 | Connector M8, 4 pin, straight, 2 m |
| ESW 31AH0200 | Connector M8, 4 pin, angular, 2 m |
| additional cable connectors and field wireable connectors: see accessories | |

| order reference | connection types |
|---|---|
| **UNCK 09G8914/D1** | cable PUR 4 x 0,08, 2 m |
| **UNCK 09G8914/KS35AD1** | flylead connector M8, L=200 mm |

## dimension drawing

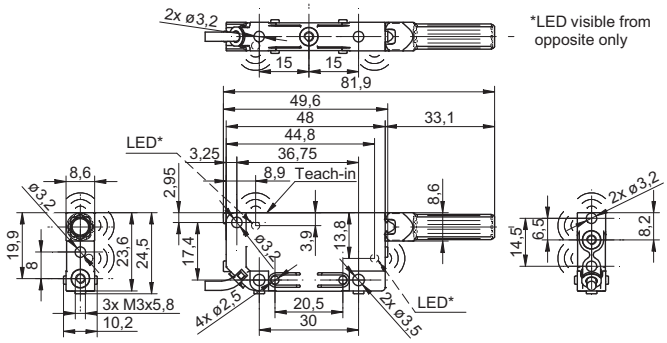


## flylead connector version

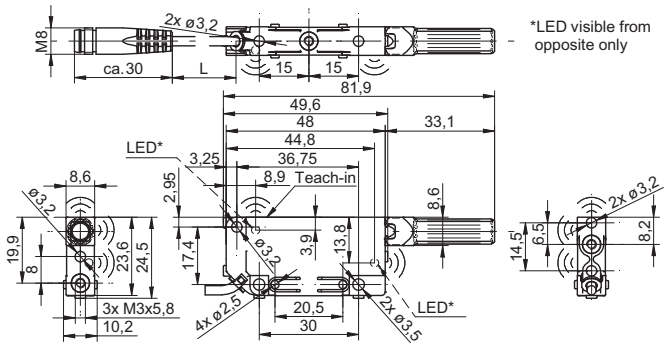


standard cable length 200 mm (L)

## connection diagram

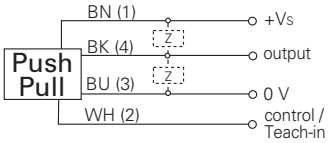


## typical sonic cone profile

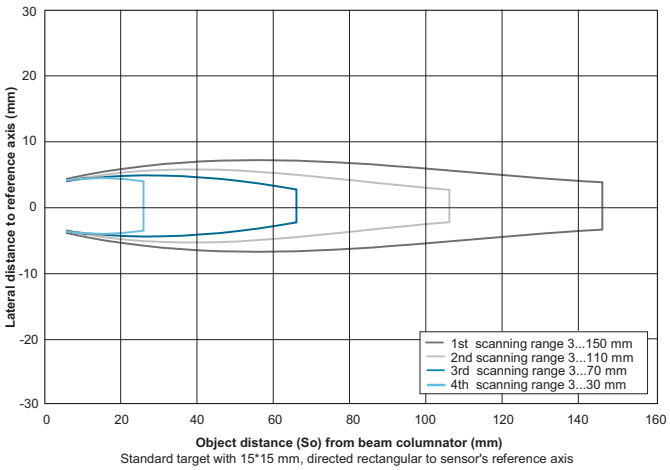


**Object distance (So) from beam columnator (mm)**
Standard target with 15*15 mm, directed rectangular to sensor's reference axis

## Sd = 200 mm

- short response time
- detects the smallest objects
- internal and external Teach-in

| general data | |
|---|---|
| scanning range sd | 30 ... 200 mm |
| scanning range far limit Sde | 30 ... 200 mm |
| hysteresis typ. | 4 % Sde |
| repeat accuracy | < 0,5 mm |
| temperature drift | < 0,18 % Sde/K |
| adjustment | Teach-in |
| response time ton | < 7 ms |
| release time toff | < 7 ms |
| alignment aid | target indication flashing |
| sonic frequency | 380 kHz |
| output indicator | green LED / red LED |
| **electrical data** | |
| voltage supply range +Vs | 12 ... 30 VDC |
| current consumption max. (no load) | 35 mA |
| output circuit | push-pull |
| output current | < 100 mA |
| voltage drop Vd | < 2 VDC |
| residual ripple | < 10 % Vs |
| short circuit protection | yes |
| reverse polarity protection | yes |
| **mechanical data** | |
| type | rectangular |
| housing material | PA 12 |
| width / diameter | 8,6 mm |
| height / length | 48,8 mm |
| depth | 30,5 mm |
| **ambient conditions** | |
| operating temperature | 0 ... +60 °C |
| protection class | IP 67 |

| connectors and mating connectors | |
|---|---|
| ESG 32AH0200 | Connector M8, 4 pin, straight, 2 m |
| ESW 31AH0200 | Connector M8, 4 pin, angular, 2 m |
| additional cable connectors and field wireable connectors: see accessories | |

| order reference | connection types |
|---|---|
| UNDK 09G8914 | cable PUR 4 x 0,08, 2 m |
| UNDK 09G8914/KS35A | flylead connector M8, L=200 mm |

### dimension drawing

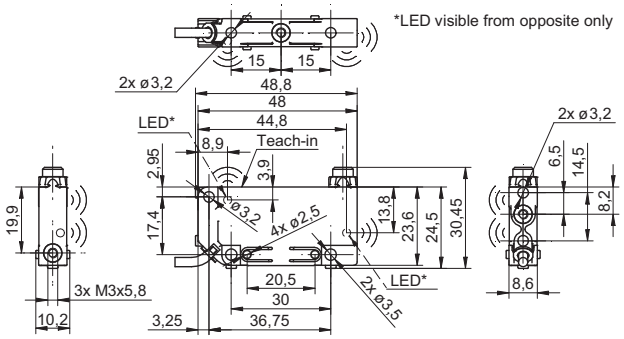


### flylead connector version

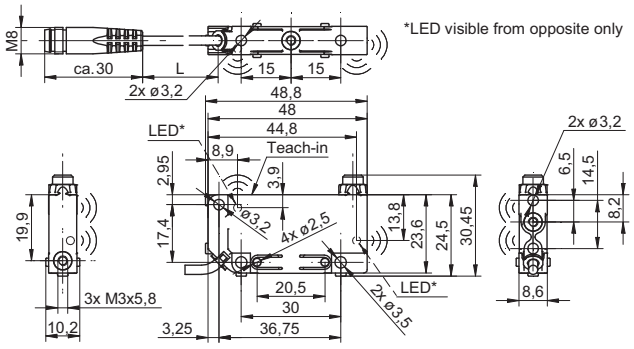


standard cable length 200 mm (L)

### connection diagram

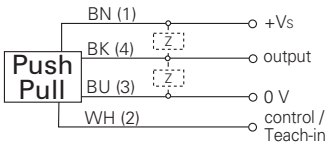


### typical sonic cone profile

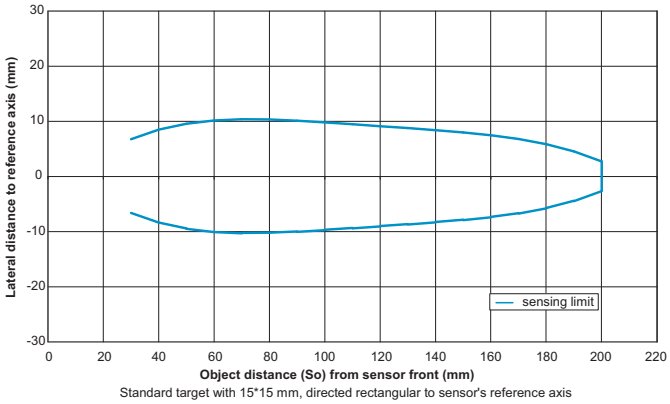


Standard target with 15*15 mm, directed rectangular to sensor's reference axis

# Sd = 150 mm

- measurement in very small containers
- stackability in a 9 mm pitch
- short response time

| general data | |
|---|---|
| scanning range sd | 3 ... 150 mm |
| scanning range far limit Sde | 3 ... 150 mm |
| hysteresis typ. | 4 % Sde |
| repeat accuracy | < 0,5 mm |
| temperature drift | < 0,18 % Sde/K |
| adjustment | Teach-in |
| response time ton | < 7 ms |
| release time toff | < 7 ms |
| alignment aid | target indication flashing |
| sonic frequency | 380 kHz |
| output indicator | green LED / red LED |
| **electrical data** | |
| voltage supply range +Vs | 12 ... 30 VDC |
| current consumption max. (no load) | 35 mA |
| output circuit | push-pull |
| output current | < 100 mA |
| voltage drop Vd | < 2 VDC |
| residual ripple | < 10 % Vs |
| short circuit protection | yes |
| reverse polarity protection | yes |
| **mechanical data** | |
| type | rectangular |
| housing material | PA 12 |
| width / diameter | 8,6 mm |
| height / length | 48,8 mm |
| depth | 57,7 mm |
| **ambient conditions** | |
| operating temperature | 0 ... +60 °C |
| protection class | IP 67 |

| connectors and mating connectors | |
|---|---|
| ESG 32AH0200 | Connector M8, 4 pin, straight, 2 m |
| ESW 31AH0200 | Connector M8, 4 pin, angular, 2 m |
| additional cable connectors and field wireable connectors: see accessories | |

| order reference | connection types |
|---|---|
| **UNDK 09G8914/D1** | cable PUR 4 x 0,08, 2 m |
| **UNDK 09G8914/KS35AD1** | flylead connector M8, L=200 mm |

## dimension drawing

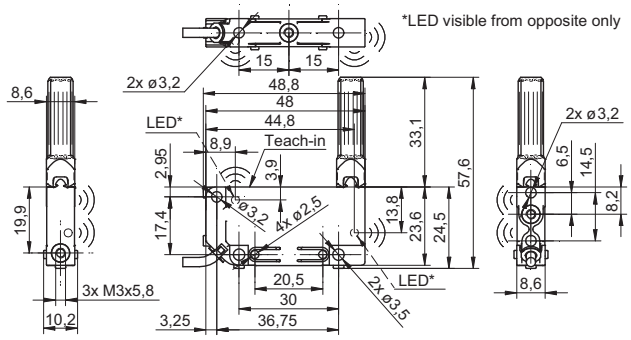


## flylead connector version

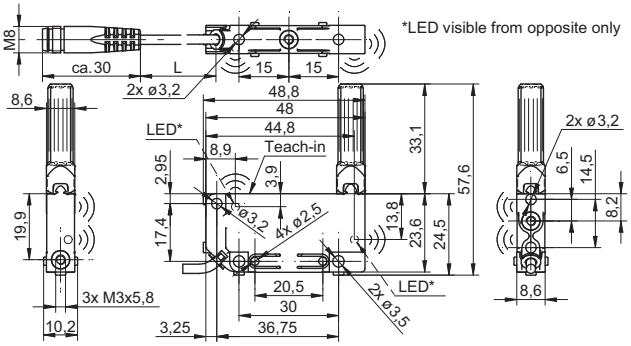


standard cable length 200 mm (L)

## connection diagram

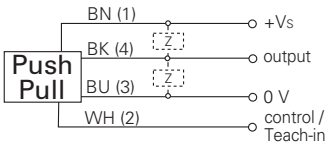


## typical sonic cone profile

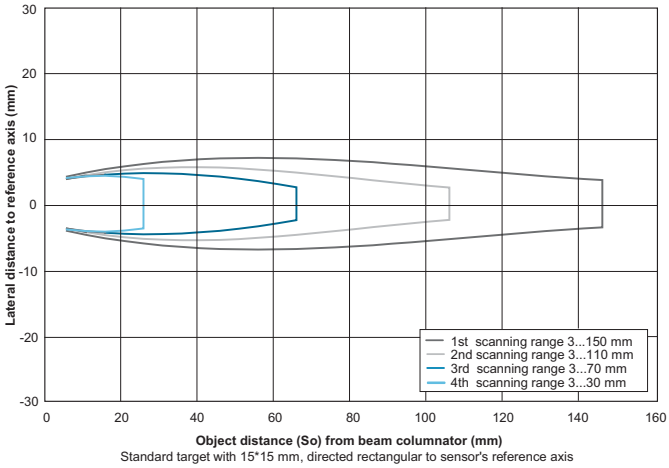


**Object distance (So) from beam columnator (mm)**
Standard target with 15*15 mm, directed rectangular to sensor's reference axis

# Sd = 200 mm

- compact housing
- very low mass (4 g)
- long sensing range / small blind range

| general data | |
|---|---|
| scanning range sd | 10 ... 200 mm |
| scanning range far limit Sde | 30 ... 200 mm |
| hysteresis typ. | 4 % Sde |
| repeat accuracy | < 0,5 mm |
| temperature drift | < 0,18 % Sde/K |
| adjustment | Teach-in |
| response time ton | < 15 ms |
| release time toff | < 15 ms |
| alignment aid | target indication flashing |
| sonic frequency | 380 kHz |
| output indicator | LED green |
| **electrical data** | |
| voltage supply range +Vs | 12 ... 30 VDC |
| current consumption max. (no load) | 35 mA |
| output current | < 200 mA |
| voltage drop Vd | < 2 VDC |
| residual ripple | < 10 % Vs |
| short circuit protection | yes |
| reverse polarity protection | yes |
| **mechanical data** | |
| type | rectangular |
| housing material | plastic (ASA) |
| width / diameter | 10,4 mm |
| height / length | 27 mm |
| depth | 14 mm |
| **ambient conditions** | |
| operating temperature | -10 ... +60 °C |
| protection class | IP 67 |

| connectors and mating connectors | |
|---|---|
| ESG 32AH0200 | Connector M8, 4 pin, straight, 2 m |
| ESW 31AH0200 | Connector M8, 4 pin, angular, 2 m |
| additional cable connectors and field wireable connectors: see accessories | |

| Accessories | |
|---|---|
| 10150326 | Sensofix series 10 / series 20 |
| 10133792 | Mounting bracket series 10 L design |
| 10114501 | Mounting bracket series 10 (U design) |
| 10162083 | Mounting panel for sensors series 10 |
| 10118798 | Mounting bracket series 10 |
| 10162376 | Sonic beam deflector for ultrasonic sensors series 10 |
| for details: see accessories section | |

## dimension drawings

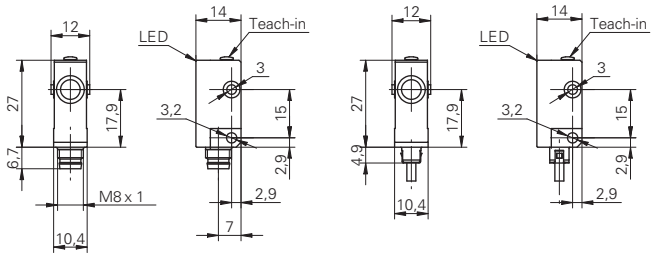


## flylead connector version

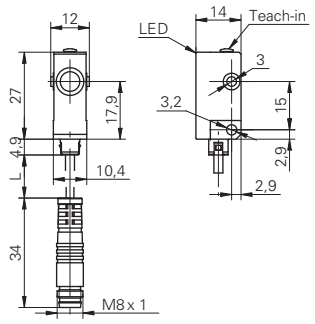


standard cable length 200 mm (L)

## connection diagrams

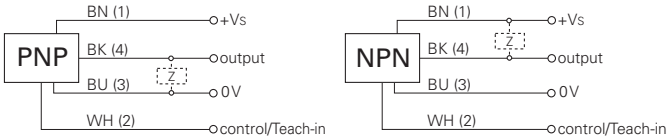


## typical sonic cone profile

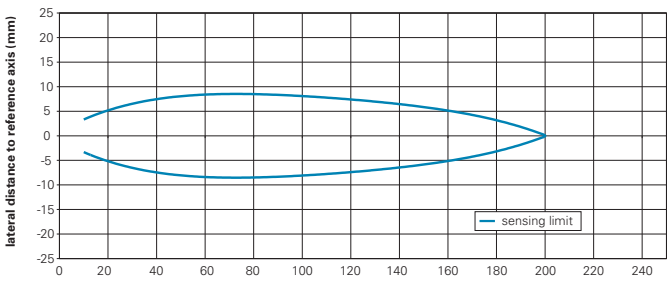


standard square target, size 15 x 15 mm, positioned perpendicularly to sensor's reference axis

| order reference | output circuit | connection types |
|---|---|---|
| **UNDK 10N8914** | NPN make function (NO) / break function (NC) | cable, 2 m |
| **UNDK 10N8914/KS35A** | NPN make function (NO) / break function (NC) | flylead connector M8, L=200 mm |
| **UNDK 10N8914/S35A** | NPN make function (NO) / break function (NC) | connector M8 |
| **UNDK 10P8914** | PNP make function (NO) / break function (NC) | cable, 2 m |
| **UNDK 10P8914/KS35A** | PNP make function (NO) / break function (NC) | flylead connector M8, L=200 mm |
| **UNDK 10P8914/S35A** | PNP make function (NO) / break function (NC) | connector M8 |

## Sd = 200 mm

- internal and external Teach-in
- small sonic beam angle

| general data | |
|---|---|
| scanning range sd | 10 ... 200 mm |
| scanning range far limit Sde | 30 ... 200 mm |
| hysteresis typ. | 4 % Sde |
| repeat accuracy | < 0,5 mm |
| temperature drift | < 0,18 % Sde/K |
| adjustment | Teach-in |
| response time ton | < 10 ms |
| release time toff | < 10 ms |
| alignment aid | target indication flashing |
| sonic frequency | 380 kHz |
| output indicator | LED green |
| **electrical data** | |
| voltage supply range +Vs | 12 ... 30 VDC |
| current consumption max. (no load) | 35 mA |
| output current | < 200 mA |
| voltage drop Vd | < 2 VDC |
| residual ripple | < 10 % Vs |
| short circuit protection | yes |
| reverse polarity protection | yes |
| **mechanical data** | |
| type | rectangular |
| housing material | polyester |
| width / diameter | 20 mm |
| height / length | 42 mm |
| depth | 15 mm |
| connection types | connector M8 |
| **ambient conditions** | |
| operating temperature | -10 ... +60 °C |
| protection class | IP 67 |

| connectors and mating connectors | |
|---|---|
| ESG 32AH0200 | Connector M8, 4 pin, straight, 2 m |
| ESW 31AH0200 | Connector M8, 4 pin, angular, 2 m |
| additional cable connectors and field wireable connectors: see accessories | |
| **Accessories** | |
| 10150326 | Sensofix series 10 / series 20 |
| 10153290 | Sonic beam deflector series 20 |
| for details: see accessories section | |

| order reference | output circuit |
|---|---|
| **UNDK 20N6914/S35A** | NPN make function (NO) |
| **UNDK 20N7914/S35A** | NPN break function (NC) |
| **UNDK 20P6914/S35A** | PNP make function (NO) |
| **UNDK 20P7914/S35A** | PNP break function (NC) |

### dimension drawing

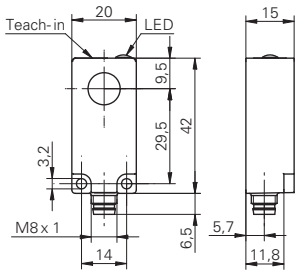


### connection diagrams

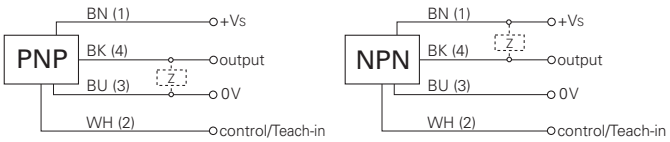


### typical sonic cone profile

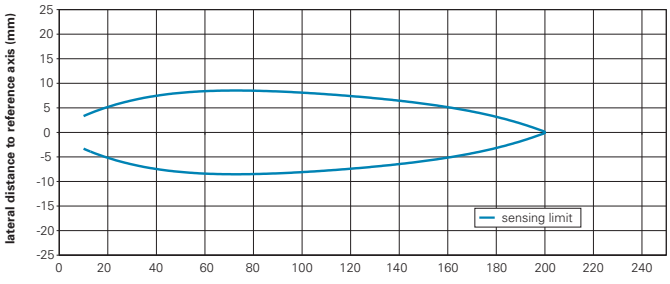


standard square target, size 15 x 15 mm, positioned perpendicularly to sensor's reference axis

## Sd = 400 mm

- internal and external Teach-in
- wide sonic beam angle

| general data | |
|---|---|
| scanning range sd | 40 ... 400 mm |
| scanning range far limit Sde | 60 ... 400 mm |
| hysteresis typ. | 4 % Sde |
| repeat accuracy | < 0,5 mm |
| temperature drift | < 0,18 % Sde/K |
| adjustment | Teach-in |
| response time ton | < 25 ms |
| release time toff | < 25 ms |
| alignment aid | target indication flashing |
| sonic frequency | 290 kHz |
| output indicator | LED green |
| **electrical data** | |
| voltage supply range +Vs | 12 ... 30 VDC |
| current consumption max. (no load) | 35 mA |
| output current | < 200 mA |
| voltage drop Vd | < 2 VDC |
| residual ripple | < 10 % Vs |
| short circuit protection | yes |
| reverse polarity protection | yes |
| **mechanical data** | |
| type | rectangular |
| housing material | polyester |
| width / diameter | 20 mm |
| height / length | 42 mm |
| depth | 15 mm |
| connection types | connector M8 |
| **ambient conditions** | |
| operating temperature | -10 ... +60 °C |
| protection class | IP 67 |

| connectors and mating connectors | |
|---|---|
| ESG 32AH0200 | Connector M8, 4 pin, straight, 2 m |
| ESW 31AH0200 | Connector M8, 4 pin, angular, 2 m |
| additional cable connectors and field wireable connectors: see accessories | |
| **Accessories** | |
| 10150326 | Sensofix series 10 / series 20 |
| 10153290 | Sonic beam deflector series 20 |
| for details: see accessories section | |

| order reference | output circuit |
|---|---|
| **UNDK 20N6912/S35A** | NPN make function (NO) |
| **UNDK 20N7912/S35A** | NPN break function (NC) |
| **UNDK 20P6912/S35A** | PNP make function (NO) |
| **UNDK 20P7912/S35A** | PNP break function (NC) |

### dimension drawing

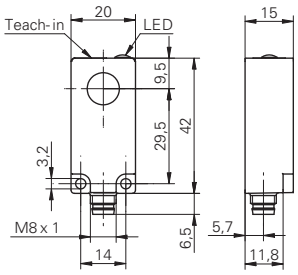


### connection diagrams

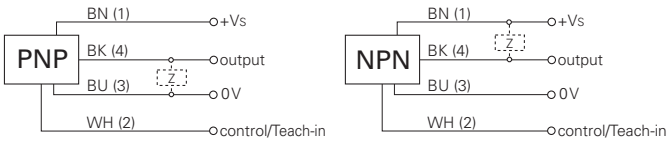


### typical sonic cone profile

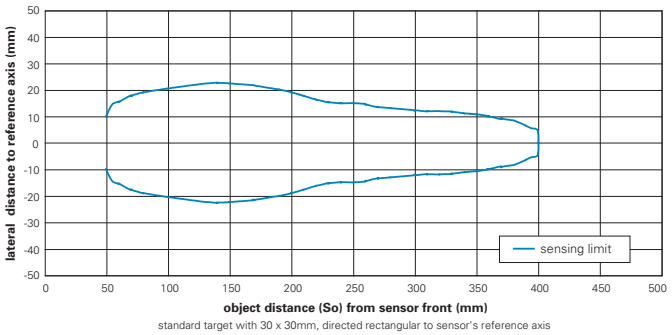


standard target with 30 x 30mm, directed rectangular to sensor's reference axis

## Sd = 1000 mm

- internal and external Teach-in
- long sensing range

| general data | |
|---|---|
| scanning range sd | 100 ... 1000 mm |
| scanning range far limit Sde | 100 ... 1000 mm |
| hysteresis typ. | 4 % Sde |
| repeat accuracy | < 0,5 mm |
| temperature drift | < 0,18 % Sde/K |
| adjustment | Teach-in |
| response time ton | < 50 ms |
| release time toff | < 50 ms |
| alignment aid | target indication flashing |
| sonic frequency | 240 kHz |
| output indicator | LED green |
| **electrical data** | |
| voltage supply range +Vs | 12 ... 30 VDC |
| current consumption max. (no load) | 35 mA |
| output current | < 200 mA |
| voltage drop Vd | < 2 VDC |
| residual ripple | < 10 % Vs |
| short circuit protection | yes |
| reverse polarity protection | yes |
| **mechanical data** | |
| type | rectangular |
| housing material | polyester |
| width / diameter | 20 mm |
| height / length | 42 mm |
| depth | 15 mm |
| connection types | connector M8 |
| **ambient conditions** | |
| operating temperature | -10 ... +60 °C |
| protection class | IP 67 |

| connectors and mating connectors | |
|---|---|
| ESG 32AH0200 | Connector M8, 4 pin, straight, 2 m |
| ESW 31AH0200 | Connector M8, 4 pin, angular, 2 m |
| additional cable connectors and field wireable connectors: see accessories | |
| **Accessories** | |
| 10150326 | Sensofix series 10 / series 20 |
| 10153290 | Sonic beam deflector series 20 |
| for details: see accessories section | |

| order reference | output circuit |
|---|---|
| **UNDK 20N6903/S35A** | NPN make function (NO) |
| **UNDK 20N7903/S35A** | NPN break function (NC) |
| **UNDK 20P6903/S35A** | PNP make function (NO) |
| **UNDK 20P7803/S35A** | PNP break function (NC) |

### dimension drawing

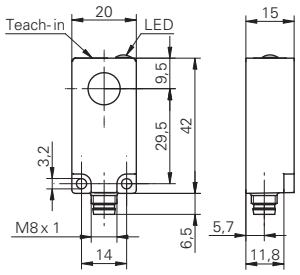


### connection diagrams

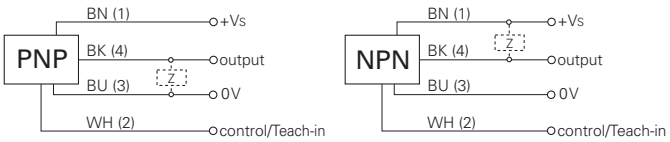


### typical sonic cone profile

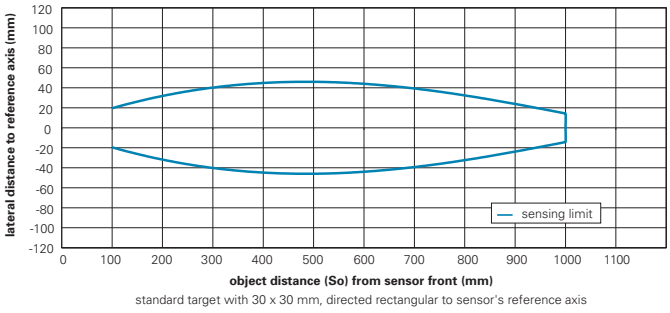


standard target with 30 x 30 mm, directed rectangular to sensor's reference axis

# Sd = 250 mm

- potentiometer
- synchronization output
- small blind range

| general data | |
|---|---|
| scanning range sd | 30 ... 250 mm |
| scanning range far limit Sde | 30 ... 250 mm |
| hysteresis typ. | 4 % Sde |
| repeat accuracy | < 0,5 mm |
| synchronization | yes |
| multiplex version | on request |
| temperature drift | < 0,18 % Sde/K |
| adjustment | potentiometer |
| response time ton (sync on) | < 10 ms |
| release time toff (sync on) | < 10 ms |
| alignment aid | target indication flashing |
| sonic frequency | 300 kHz |
| output indicator | LED green |
| **electrical data** | |
| voltage supply range +Vs | 12 ... 30 VDC |
| current consumption max. (no load) | 35 mA |
| output current | < 200 mA |
| voltage drop Vd | < 2 VDC |
| residual ripple | < 10 % Vs |
| short circuit protection | yes |
| reverse polarity protection | yes |
| **mechanical data** | |
| type | rectangular |
| housing material | polyester / die-cast zinc |
| width / diameter | 30 mm |
| height / length | 65 mm |
| depth | 31 mm |
| **ambient conditions** | |
| operating temperature | -25 ... +60 °C |
| protection class | IP 67 |

| connectors and mating connectors | |
|---|---|
| ESG 34AH0200 | Connector M12, 4 pin, straight, 2 m |
| ESW 33AH0200 | Connector M12, 4 pin, angular, 2 m |
| additional cable connectors and field wireable connectors: see accessories | |

| Accessories | |
|---|---|
| 10152386 | Sensofix series 30 |
| for details: see accessories section | |

| order reference | output circuit | connection types |
|---|---|---|
| **UNDK 30N1713** | NPN make function (NO) | cable, 2 m |
| **UNDK 30N1713/S14** | NPN make function (NO) | connector M12 |
| **UNDK 30N3713** | NPN break function (NC) | cable, 2 m |
| **UNDK 30N3713/S14** | NPN break function (NC) | connector M12 |
| **UNDK 30P1713** | PNP make function (NO) | cable, 2 m |
| **UNDK 30P1713/S14** | PNP make function (NO) | connector M12 |
| **UNDK 30P3713** | PNP break function (NC) | cable, 2 m |
| **UNDK 30P3713/S14** | PNP break function (NC) | connector M12 |

## dimension drawings

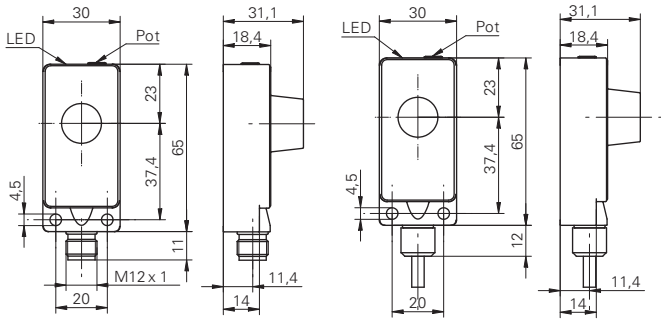


## connection diagrams

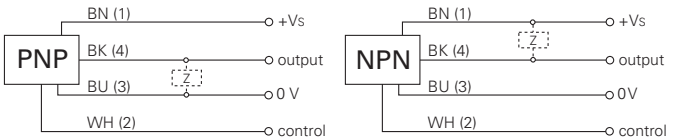


## typical sonic cone profile

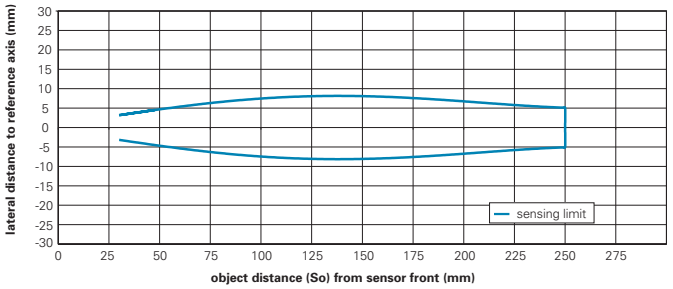


standard square target, size 15 x 15 mm, positioned perpendicularly to sensor's reference axis

# Sd = 400 mm

- potentiometer
- synchronization output

| general data | |
|---|---|
| scanning range sd | 60 ... 400 mm |
| scanning range far limit Sde | 60 ... 400 mm |
| hysteresis typ. | 4 % Sde |
| repeat accuracy | < 0,5 mm |
| synchronization | yes |
| multiplex version | on request |
| temperature drift | < 0,18 % Sde/K |
| adjustment | potentiometer |
| response time ton (sync on) | < 25 ms |
| release time toff (sync on) | < 25 ms |
| alignment aid | target indication flashing |
| sonic frequency | 400 kHz |
| output indicator | LED green |
| **electrical data** | |
| voltage supply range +Vs | 12 ... 30 VDC |
| current consumption max. (no load) | 35 mA |
| output current | < 200 mA |
| voltage drop Vd | < 2 VDC |
| residual ripple | < 10 % Vs |
| short circuit protection | yes |
| reverse polarity protection | yes |
| **mechanical data** | |
| type | rectangular |
| housing material | polyester / die-cast zinc |
| width / diameter | 30 mm |
| height / length | 65 mm |
| depth | 31 mm |
| **ambient conditions** | |
| operating temperature | -25 ... +60 °C |
| protection class | IP 67 |

| connectors and mating connectors | |
|---|---|
| ESG 34AH0200 | Connector M12, 4 pin, straight, 2 m |
| ESW 33AH0200 | Connector M12, 4 pin, angular, 2 m |
| additional cable connectors and field wireable connectors: see accessories | |
| **Accessories** | |
| 10152386 | Sensofix series 30 |
| for details: see accessories section | |

| order reference | output circuit | connection types |
|---|---|---|
| **UNDK 30N1712** | NPN make function (NO) | cable, 2 m |
| **UNDK 30N1712/S14** | NPN make function (NO) | connector M12 |
| **UNDK 30N3712** | NPN break function (NC) | cable, 2 m |
| **UNDK 30N3712/S14** | NPN break function (NC) | connector M12 |
| **UNDK 30P1712** | PNP make function (NO) | cable, 2 m |
| **UNDK 30P1712/S14** | PNP make function (NO) | connector M12 |
| **UNDK 30P3712** | PNP break function (NC) | cable, 2 m |
| **UNDK 30P3712/S14** | PNP break function (NC) | connector M12 |

## dimension drawings

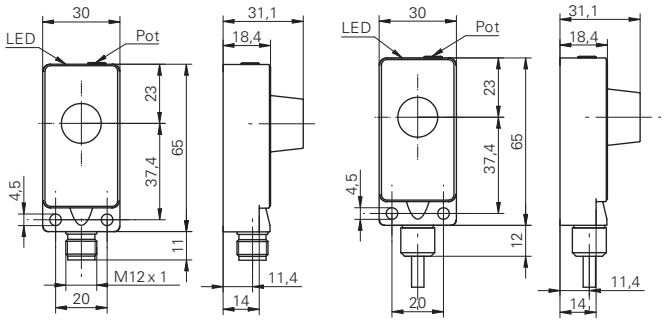


## connection diagrams

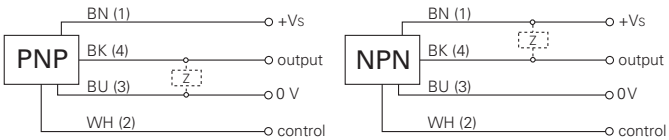


## typical sonic cone profile

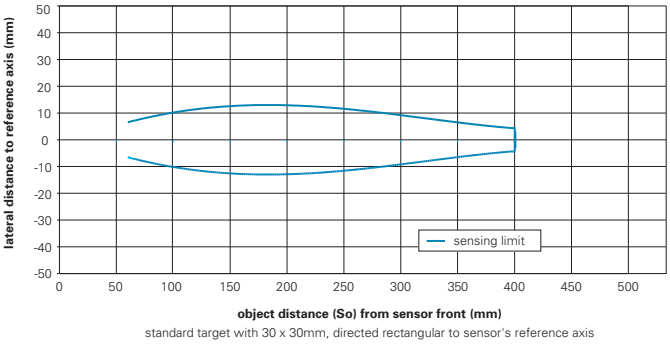


standard target with 30 x 30mm, directed rectangular to sensor's reference axis

## Sd = 1000 mm

- potentiometer
- synchronization output
- temperature compensation

| general data | |
|---|---|
| scanning range sd | 100 ... 1000 mm |
| scanning range far limit Sde | 100 ... 1000 mm |
| hysteresis typ. | 4 % Sde |
| repeat accuracy | < 0,5 mm |
| synchronization | yes |
| multiplex version | on request |
| temperature drift | < 0,1 % Sde/K |
| adjustment | potentiometer |
| response time ton (sync on) | < 50 ms |
| release time toff (sync on) | < 50 ms |
| alignment aid | target indication flashing |
| sonic frequency | 240 kHz |
| output indicator | LED green |
| **electrical data** | |
| voltage supply range +Vs | 12 ... 30 VDC |
| current consumption max. (no load) | 35 mA |
| output current | < 200 mA |
| voltage drop Vd | < 2 VDC |
| residual ripple | < 10 % Vs |
| short circuit protection | yes |
| reverse polarity protection | yes |
| **mechanical data** | |
| type | rectangular |
| housing material | polyester / die-cast zinc |
| width / diameter | 30 mm |
| height / length | 65 mm |
| depth | 31 mm |
| **ambient conditions** | |
| operating temperature | -10 ... +60 °C |
| protection class | IP 67 |

| connectors and mating connectors | |
|---|---|
| ESG 34AH0200 | Connector M12, 4 pin, straight, 2 m |
| ESW 33AH0200 | Connector M12, 4 pin, angular, 2 m |
| additional cable connectors and field wireable connectors: see accessories | |

| Accessories | |
|---|---|
| 10152386 | Sensofix series 30 |
| for details: see accessories section | |

| order reference | output circuit | connection types |
|---|---|---|
| **UNDK 30N1703** | NPN make function (NO) | cable, 2 m |
| **UNDK 30N1703/S14** | NPN make function (NO) | connector M12 |
| **UNDK 30N3703** | NPN break function (NC) | cable, 2 m |
| **UNDK 30N3703/S14** | NPN break function (NC) | connector M12 |
| **UNDK 30P1703** | PNP make function (NO) | cable, 2 m |
| **UNDK 30P1703/S14** | PNP make function (NO) | connector M12 |
| **UNDK 30P3703** | PNP break function (NC) | cable, 2 m |
| **UNDK 30P3703/S14** | PNP break function (NC) | connector M12 |

### dimension drawings

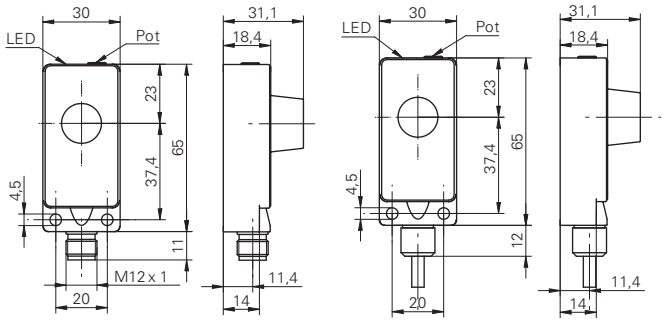


### connection diagrams

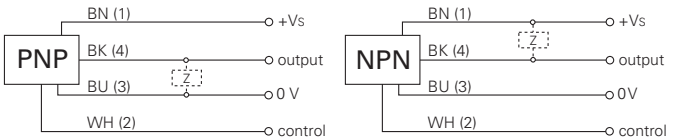


### typical sonic cone profile

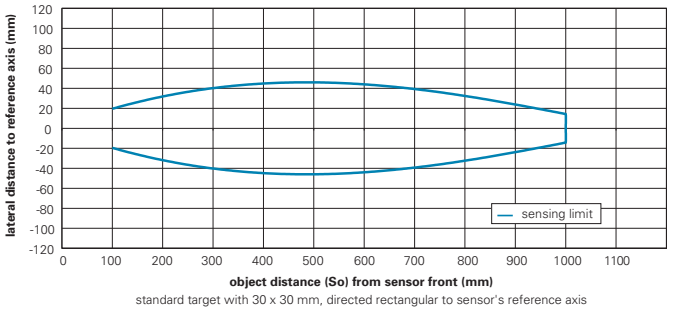


standard target with 30 x 30 mm, directed rectangular to sensor's reference axis

# Sd = 40 mm

- high speed sensors
- with beam columnator for measurement in very small containers
- external Teach-in

| general data | |
|---|---|
| special type | Highspeed |
| scanning range sd | 0 ... 40 mm |
| scanning range far limit Sde | 0 ... 40 mm |
| hysteresis typ. | 4 % Sde |
| repeat accuracy | < 0,5 mm |
| temperature drift | < 0,18 % Sde/K |
| adjustment | external Teach-in |
| response time ton | < 1,3 ms |
| release time toff | < 1,3 ms |
| switching frequency | < 225 Hz |
| alignment aid | target indication flashing |
| sonic frequency | 380 kHz |
| output indicator | LED green |
| **electrical data** | |
| voltage supply range +Vs | 12 ... 30 VDC |
| current consumption max. (no load) | 35 mA |
| output current | < 200 mA |
| voltage drop Vd | < 2 VDC |
| residual ripple | < 10 % Vs |
| short circuit protection | yes |
| reverse polarity protection | yes |
| **mechanical data** | |
| type | cylindrical threaded |
| housing material | brass nickel plated |
| width / diameter | 12 mm |
| height / length | 100 mm |
| connection types | connector M12 |
| **ambient conditions** | |
| operating temperature | -10 ... +60 °C |
| protection class | IP 67 |

| connectors and mating connectors | |
|---|---|
| ESG 34AH0200 | Connector M12, 4 pin, straight, 2 m |
| ESW 33AH0200 | Connector M12, 4 pin, angular, 2 m |
| additional cable connectors and field wireable connectors: see accessories | |
| **Accessories** | |
| 10151720 | Sensofix series 12 round |
| 10141584 | Teach-in Adapter M12 |
| for details: see accessories section | |

## dimension drawing

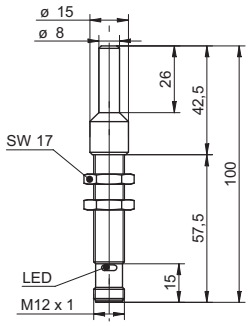


## connection diagrams

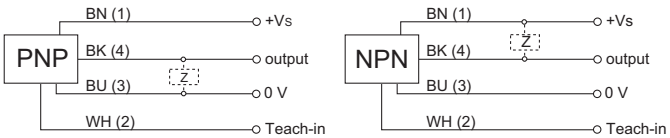


## typical sonic cone profile

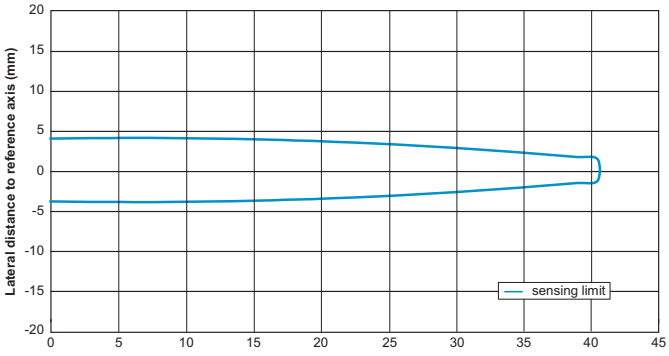


Standard target with 15*15 mm, directed rectangular to sensor's reference axis

| order reference | output circuit |
|---|---|
| **UNAM 12N8910/S14OD** | NPN make function (NO) / break function (NC) |
| **UNAM 12P8910/S14OD** | PNP make function (NO) / break function (NC) |

# Sd = 70 mm

- with beam columnator for measurement in very small containers
- external Teach-in
- short blind range

| general data | |
|---|---|
| scanning range sd | 5 ... 70 mm |
| scanning range far limit Sde | 5 ... 70 mm |
| hysteresis typ. | 4 % Sde |
| repeat accuracy | < 0,5 mm |
| temperature drift | < 0,18 % Sde/K |
| adjustment | external Teach-in |
| response time ton | < 10 ms |
| release time toff | < 10 ms |
| alignment aid | target indication flashing |
| sonic frequency | 380 kHz |
| output indicator | LED green |
| **electrical data** | |
| voltage supply range +Vs | 12 ... 30 VDC |
| current consumption max. (no load) | 35 mA |
| output current | < 200 mA |
| voltage drop Vd | < 2 VDC |
| residual ripple | < 10 % Vs |
| short circuit protection | yes |
| reverse polarity protection | yes |
| **mechanical data** | |
| type | cylindrical threaded |
| housing material | brass nickel plated |
| width / diameter | 12 mm |
| height / length | 100 mm |
| connection types | connector M12 |
| **ambient conditions** | |
| operating temperature | 0 ... +60 °C |
| protection class | IP 67 |

| connectors and mating connectors | |
|---|---|
| ESG 34AH0200 | Connector M12, 4 pin, straight, 2 m |
| ESW 33AH0200 | Connector M12, 4 pin, angular, 2 m |
| additional cable connectors and field wireable connectors: see accessories | |
| **Accessories** | |
| 10151720 | Sensofix series 12 round |
| 10141584 | Teach-in Adapter M12 |
| for details: see accessories section | |

| order reference | output circuit |
|---|---|
| **UNAM 12N1914/S14D** | NPN make function (NO) |
| **UNAM 12P1914/S14D** | PNP make function (NO) |

## dimension drawing

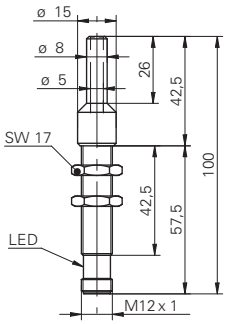


## connection diagrams

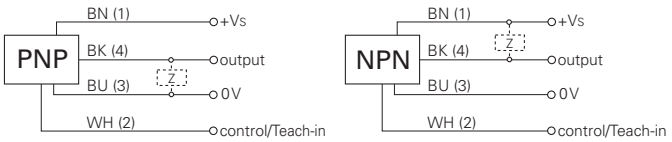


## typical sonic cone profile

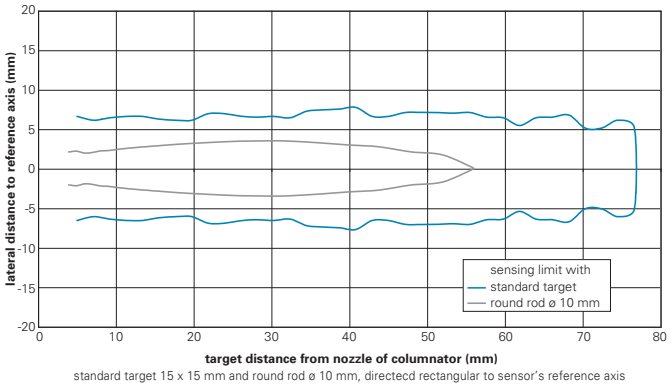


standard target 15 x 15 mm and round rod ø 10 mm, directecd rectangular to sensor's reference axis

## Sd = 70 mm

- high speed sensoren
- external Teach-in
- small sonic beam angle

| general data | |
|---|---|
| special type | Highspeed |
| scanning range sd | 10 ... 70 mm |
| scanning range far limit Sde | 30 ... 70 mm |
| hysteresis typ. | 4 % Sde |
| repeat accuracy | < 0,5 mm |
| temperature drift | < 0,18 % Sde/K |
| adjustment | external Teach-in |
| response time ton | < 1,3 ms |
| release time toff | < 1,3 ms |
| switching frequency | < 225 Hz |
| alignment aid | target indication flashing |
| sonic frequency | 380 kHz |
| output indicator | LED green |
| **electrical data** | |
| voltage supply range +Vs | 12 ... 30 VDC |
| current consumption max. (no load) | 35 mA |
| output current | < 200 mA |
| voltage drop Vd | < 2 VDC |
| residual ripple | < 10 % Vs |
| short circuit protection | yes |
| reverse polarity protection | yes |
| **mechanical data** | |
| type | cylindrical threaded |
| housing material | brass nickel plated |
| width / diameter | 12 mm |
| height / length | 70 mm |
| connection types | connector M12 |
| **ambient conditions** | |
| operating temperature | -10 ... +60 °C |
| protection class | IP 67 |

| connectors and mating connectors | |
|---|---|
| ESG 34AH0200 | Connector M12, 4 pin, straight, 2 m |
| ESW 33AH0200 | Connector M12, 4 pin, angular, 2 m |
| additional cable connectors and field wireable connectors: see accessories | |
| **Accessories** | |
| 10151720 | Sensofix series 12 round |
| 10141584 | Teach-in Adapter M12 |
| for details: see accessories section | |

### dimension drawing

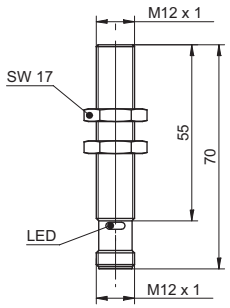


### connection diagrams

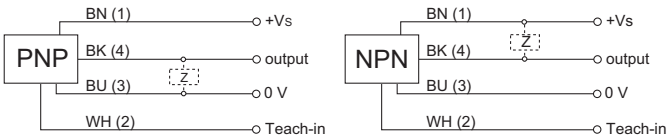


### typical sonic cone profile

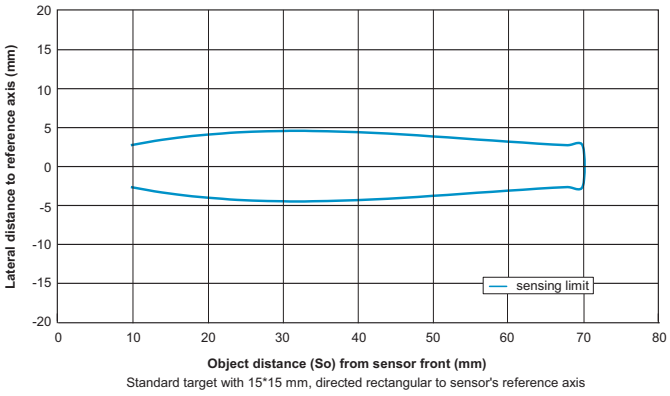


Standard target with 15*15 mm, directed rectangular to sensor's reference axis

| order reference | output circuit |
|---|---|
| **UNAM 12N8910/S14O** | NPN make function (NO) / break function (NC) |
| **UNAM 12P8910/S14O** | PNP make function (NO) / break function (NC) |

## Sd = 200 mm

- external Teach-in
- Teach-in adapter
- small sonic beam angle

| general data | |
|---|---|
| scanning range sd | 10 ... 200 mm |
| scanning range far limit Sde | 30 ... 200 mm |
| hysteresis typ. | 4 % Sde |
| repeat accuracy | < 0,5 mm |
| temperature drift | < 0,18 % Sde/K |
| adjustment | external Teach-in |
| response time ton | < 10 ms |
| release time toff | < 10 ms |
| alignment aid | target indication flashing |
| sonic frequency | 380 kHz |
| output indicator | LED green |
| **electrical data** | |
| voltage supply range +Vs | 12 ... 30 VDC |
| current consumption max. (no load) | 35 mA |
| output current | < 200 mA |
| voltage drop Vd | < 2 VDC |
| residual ripple | < 10 % Vs |
| short circuit protection | yes |
| reverse polarity protection | yes |
| **mechanical data** | |
| type | cylindrical threaded |
| housing material | brass nickel plated |
| width / diameter | 12 mm |
| height / length | 70 mm |
| connection types | connector M12 |
| **ambient conditions** | |
| operating temperature | -10 ... +60 °C |
| protection class | IP 67 |

| connectors and mating connectors | |
|---|---|
| ESG 34AH0200 | Connector M12, 4 pin, straight, 2 m |
| ESW 33AH0200 | Connector M12, 4 pin, angular, 2 m |
| additional cable connectors and field wireable connectors: see accessories | |

| Accessories | |
|---|---|
| 10151720 | Sensofix series 12 round |
| 10141584 | Teach-in Adapter M12 |
| for details: see accessories section | |

| order reference | output circuit |
|---|---|
| **UNAM 12N1914/S14** | NPN make function (NO) |
| **UNAM 12N3914/S14** | NPN break function (NC) |
| **UNAM 12P1914/S14** | PNP make function (NO) |
| **UNAM 12P3914/S14** | PNP break function (NC) |

### dimension drawing

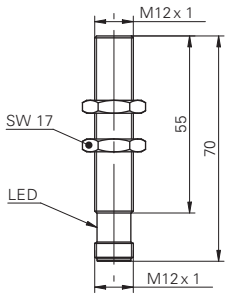


### connection diagrams

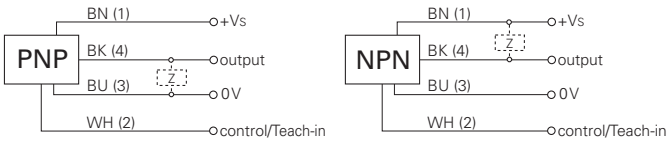


### typical sonic cone profile

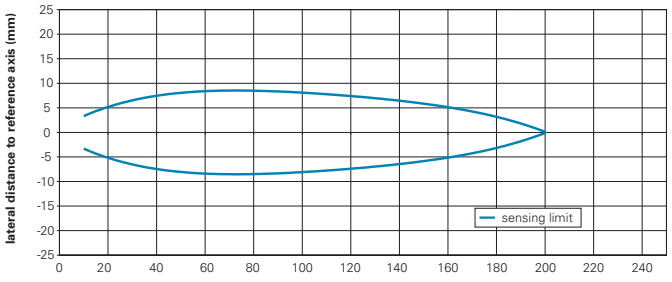


standard square target, size 15 x 15 mm, positioned perpendicularly to sensor's reference axis

## Sd = 400 mm

- external Teach-in
- Teach-in adapter
- wide sonic beam angle

| general data | |
|---|---|
| scanning range sd | 40 ... 400 mm |
| scanning range far limit Sde | 60 ... 400 mm |
| hysteresis typ. | 4 % Sde |
| repeat accuracy | < 0,5 mm |
| temperature drift | < 0,18 % Sde/K |
| adjustment | external Teach-in |
| response time ton | < 25 ms |
| release time toff | < 25 ms |
| alignment aid | target indication flashing |
| sonic frequency | 290 kHz |
| output indicator | LED green |
| **electrical data** | |
| voltage supply range +Vs | 12 ... 30 VDC |
| current consumption max. (no load) | 35 mA |
| output current | < 200 mA |
| voltage drop Vd | < 2 VDC |
| residual ripple | < 10 % Vs |
| short circuit protection | yes |
| reverse polarity protection | yes |
| **mechanical data** | |
| type | cylindrical threaded |
| housing material | brass nickel plated |
| width / diameter | 12 mm |
| height / length | 70 mm |
| connection types | connector M12 |
| **ambient conditions** | |
| operating temperature | -10 ... +60 °C |
| protection class | IP 67 |

| connectors and mating connectors | |
|---|---|
| ESG 34AH0200 | Connector M12, 4 pin, straight, 2 m |
| ESW 33AH0200 | Connector M12, 4 pin, angular, 2 m |
| additional cable connectors and field wireable connectors: see accessories | |
| **Accessories** | |
| 10151720 | Sensofix series 12 round |
| 10141584 | Teach-in Adapter M12 |
| for details: see accessories section | |

| order reference | output circuit |
|---|---|
| **UNAM 12N1912/S14** | NPN make function (NO) |
| **UNAM 12N3912/S14** | NPN break function (NC) |
| **UNAM 12P1912/S14** | PNP make function (NO) |
| **UNAM 12P3912/S14** | PNP break function (NC) |

### dimension drawing

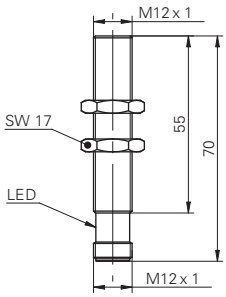


### connection diagrams

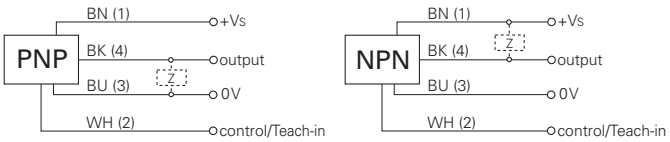


### typical sonic cone profile

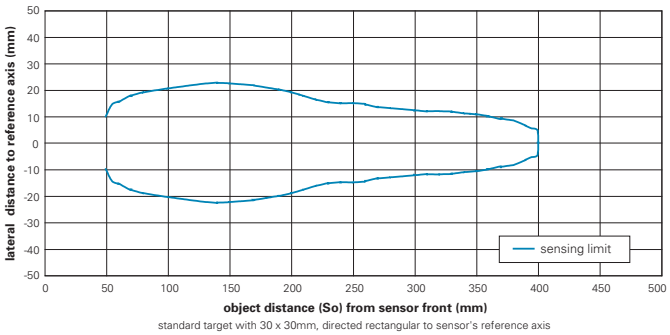


standard target with 30 x 30mm, directed rectangular to sensor's reference axis

## Sd = 700 mm

- potentiometer
- synchronization output

| general data | |
|---|---|
| scanning range sd | 100 ... 700 mm |
| scanning range far limit Sde | 110 ... 700 mm |
| hysteresis typ. | 4 % Sde |
| repeat accuracy | < 0,5 mm |
| synchronization | yes |
| temperature drift | < 0,18 % Sde/K |
| adjustment | potentiometer |
| response time ton (sync on) | < 50 ms |
| release time toff (sync on) | < 50 ms |
| alignment aid | target indication flashing |
| sonic frequency | 240 kHz |
| output indicator | LED green |
| **electrical data** | |
| voltage supply range +Vs | 12 ... 30 VDC |
| current consumption max. (no load) | 30 mA |
| output current | < 200 mA |
| voltage drop Vd | < 2 VDC |
| residual ripple | < 10 % Vs |
| short circuit protection | yes |
| reverse polarity protection | yes |
| **mechanical data** | |
| type | cylindrical threaded |
| housing material | brass nickel plated |
| width / diameter | 18 mm |
| height / length | 89 mm |
| connection types | cable, 2 m |
| **ambient conditions** | |
| operating temperature | -10 ... +60 °C |
| protection class | IP 67 |

| Accessories | |
|---|---|
| 10151658 | Sensofix series 18 |
| 10164264 | Sonic beam deflector series 18 rectangular |
| for details: see accessories section | |

| order reference | output circuit |
|---|---|
| **UNAM 18N1703** | NPN make function (NO) |
| **UNAM 18N3703** | NPN break function (NC) |
| **UNAM 18P1703** | PNP make function (NO) |
| **UNAM 18P3703** | PNP break function (NC) |

### dimension drawing

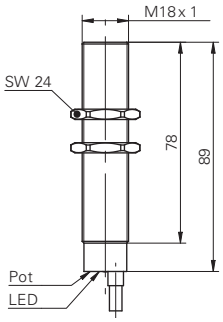


### connection diagrams

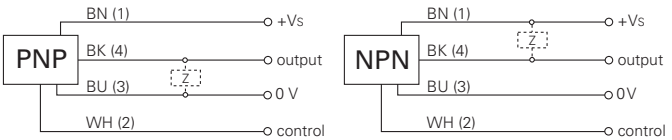


### typical sonic cone profile

**typical sonic cone profile of ultrasonic sensors with sensing range 100...700 mm**
standard square target, size 30 x 30 mm, positioned perpendicularly to sensor's reference axis

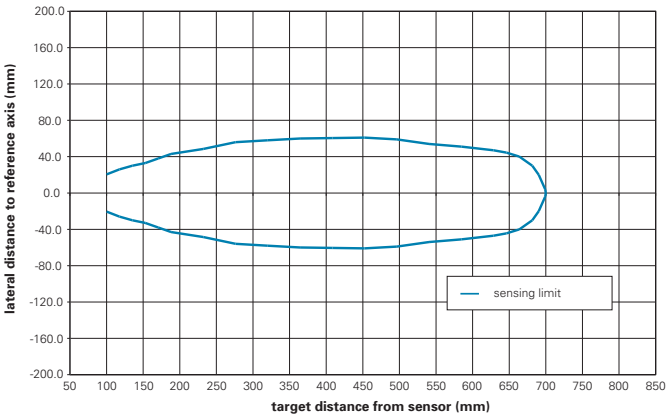

## Sd = 1000 mm

- internal and external Teach-in

| general data | |
|---|---|
| scanning range sd | 100 ... 1000 mm |
| scanning range far limit Sde | 100 ... 1000 mm |
| hysteresis typ. | 4 % Sde |
| repeat accuracy | < 0,5 mm |
| temperature drift | < 0,18 % Sde/K |
| adjustment | Teach-in |
| response time ton | < 50 ms |
| release time toff | < 50 ms |
| alignment aid | target indication flashing |
| sonic frequency | 240 kHz |
| output indicator | LED green |
| **electrical data** | |
| voltage supply range +Vs | 12 ... 30 VDC |
| current consumption max. (no load) | 35 mA |
| output current | < 200 mA |
| voltage drop Vd | < 2 VDC |
| residual ripple | < 10 % Vs |
| short circuit protection | yes |
| reverse polarity protection | yes |
| **mechanical data** | |
| type | cylindrical threaded |
| housing material | brass nickel plated |
| width / diameter | 18 mm |
| height / length | 90 mm |
| connection types | connector M12 |
| **ambient conditions** | |
| operating temperature | -10 ... +60 °C |
| protection class | IP 67 |

| connectors and mating connectors | |
|---|---|
| ESG 34AH0200 | Connector M12, 4 pin, straight, 2 m |
| ESW 33AH0200 | Connector M12, 4 pin, angular, 2 m |
| additional cable connectors and field wireable connectors: see accessories | |
| **Accessories** | |
| 10151658 | Sensofix series 18 |
| 10164264 | Sonic beam deflector series 18 rectangular |
| for details: see accessories section | |

| order reference | output circuit |
|---|---|
| **UNAM 18N6903/S14** | NPN make function (NO) |
| **UNAM 18P6903/S14** | PNP make function (NO) |
| **UNAM 18P7903/S14** | PNP break function (NC) |

### dimension drawing

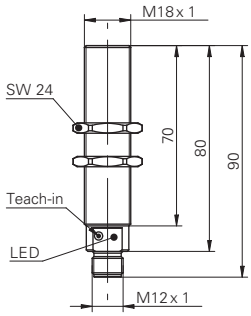


### connection diagrams

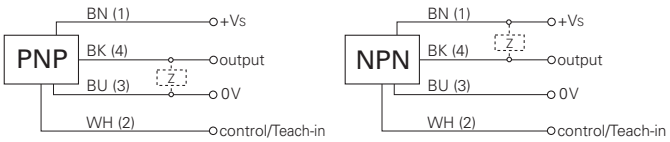


### typical sonic cone profile

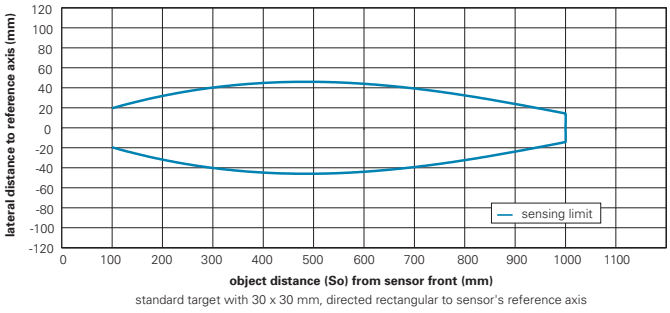


standard target with 30 x 30 mm, directed rectangular to sensor's reference axis

## Sd = 400 mm

- internal and external Teach-in
- sensorfront chemically resistant
- stainless steel housing

| general data | |
|---|---|
| special type | chemically resistant |
| scanning range sd | 60 ... 400 mm |
| scanning range far limit Sde | 60 ... 400 mm |
| hysteresis typ. | 4 % Sde |
| repeat accuracy | < 0,5 mm |
| temperature drift | < 0,18 % Sde/K |
| adjustment | Teach-in |
| response time ton | < 25 ms |
| release time toff | < 25 ms |
| alignment aid | target indication flashing |
| sonic frequency | 400 kHz |
| output indicator | LED green |
| **electrical data** | |
| voltage supply range +Vs | 12 ... 30 VDC |
| current consumption max. (no load) | 35 mA |
| output current | < 200 mA |
| voltage drop Vd | < 2 VDC |
| residual ripple | < 10 % Vs |
| short circuit protection | yes |
| reverse polarity protection | yes |
| **mechanical data** | |
| type | cylindrical threaded |
| housing material | stainless steel 1.4435 (V4A) |
| coating active face | Parylene |
| material O-ring | FFKM |
| front of sensor durable against pressure | 6 bar, 20'000 cycle |
| width / diameter | 18 mm |
| height / length | 91,5 mm |
| connection types | connector M12 |
| **ambient conditions** | |
| operating temperature | 0 ... +60 °C |
| protection class | IP 67 |

| connectors and mating connectors | |
|---|---|
| ESG 34AH0200 | Connector M12, 4 pin, straight, 2 m |
| ESW 33AH0200 | Connector M12, 4 pin, angular, 2 m |
| additional cable connectors and field wireable connectors: see accessories | |
| **Accessories** | |
| 10151658 | Sensofix series 18 |
| 10164264 | Sonic beam deflector series 18 rectangular |
| for details: see accessories section | |

| order reference | output circuit |
|---|---|
| **UNAR 18N6912/S14G** | NPN make function (NO) |
| **UNAR 18N7912/S14G** | NPN break function (NC) |
| **UNAR 18P6912/S14G** | PNP make function (NO) |
| **UNAR 18P7912/S14G** | PNP break function (NC) |

### dimension drawing

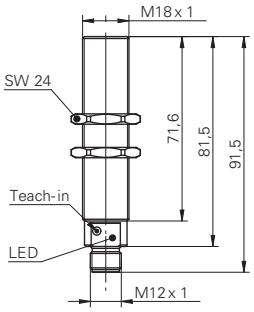


### connection diagrams

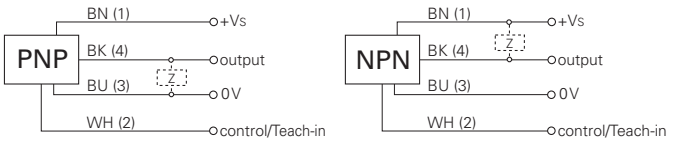


### typical sonic cone profile

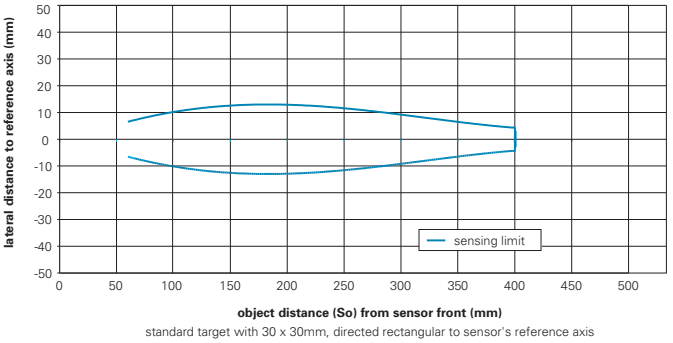


standard target with 30 x 30mm, directed rectangular to sensor's reference axis

## Sd = 1000 mm

- internal and external Teach-in
- sensorfront chemically resistant
- stainless steel housing

| general data | |
|---|---|
| special type | chemically resistant |
| scanning range sd | 100 ... 1000 mm |
| scanning range far limit Sde | 100 ... 1000 mm |
| hysteresis typ. | 4 % Sde |
| repeat accuracy | < 0,5 mm |
| temperature drift | < 0,18 % Sde/K |
| adjustment | Teach-in |
| response time ton | < 50 ms |
| release time toff | < 50 ms |
| alignment aid | target indication flashing |
| sonic frequency | 240 kHz |
| output indicator | LED green |
| **electrical data** | |
| voltage supply range +Vs | 12 ... 30 VDC |
| current consumption max. (no load) | 35 mA |
| output current | < 200 mA |
| voltage drop Vd | < 2 VDC |
| residual ripple | < 10 % Vs |
| short circuit protection | yes |
| reverse polarity protection | yes |
| **mechanical data** | |
| type | cylindrical threaded |
| housing material | stainless steel 1.4435 (V4A) |
| coating active face | Parylene |
| material O-ring | FFKM |
| front of sensor durable against pressure | 6 bar, 20'000 cycle |
| width / diameter | 18 mm |
| height / length | 91,5 mm |
| connection types | connector M12 |
| **ambient conditions** | |
| operating temperature | 0 ... +60 °C |
| protection class | IP 67 |

| connectors and mating connectors | |
|---|---|
| ESG 34AH0200 | Connector M12, 4 pin, straight, 2 m |
| ESW 33AH0200 | Connector M12, 4 pin, angular, 2 m |
| additional cable connectors and field wireable connectors: see accessories | |
| **Accessories** | |
| 10151658 | Sensofix series 18 |
| 10164264 | Sonic beam deflector series 18 rectangular |
| for details: see accessories section | |

| order reference | output circuit |
|---|---|
| **UNAR 18N6903/S14G** | NPN make function (NO) |
| **UNAR 18N7903/S14G** | NPN break function (NC) |
| **UNAR 18P6903/S14G** | PNP make function (NO) |
| **UNAR 18P7903/S14G** | PNP break function (NC) |

### dimension drawing

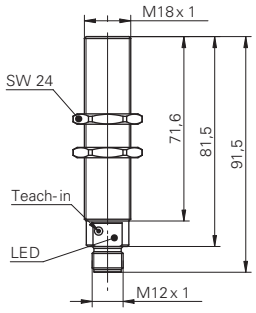


### connection diagrams

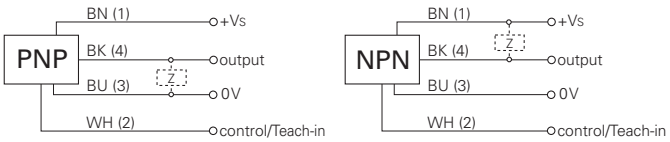


### typical sonic cone profile

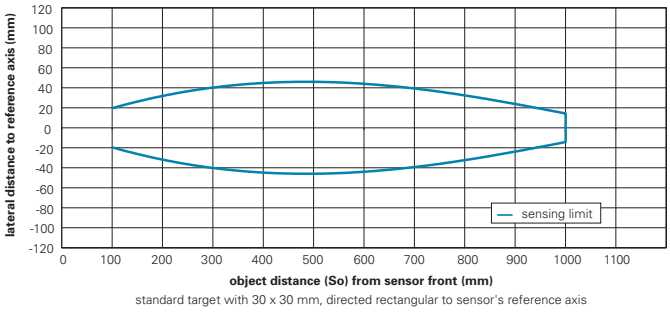


standard target with 30 x 30 mm, directed rectangular to sensor's reference axis

# Sd = 1500 mm

- potentiometer
- increased sensing range

| general data | |
|---|---|
| scanning range sd | 200 ... 1500 mm |
| scanning range far limit Sde | 200 ... 1500 mm |
| hysteresis typ. | 4 % Sde |
| repeat accuracy | < 1 mm |
| temperature drift | < 0,18 % Sde/K |
| adjustment | potentiometer |
| response time ton | < 100 ms |
| release time toff | < 100 ms |
| alignment aid | target indication flashing |
| sonic frequency | 200 kHz |
| output indicator | LED green |
| **electrical data** | |
| voltage supply range +Vs | 12 ... 30 VDC |
| current consumption max. (no load) | 30 mA |
| output current | < 200 mA |
| voltage drop Vd | < 2 VDC |
| residual ripple | < 10 % Vs |
| short circuit protection | yes |
| reverse polarity protection | yes |
| **mechanical data** | |
| type | cylindrical threaded |
| housing material | brass nickel plated |
| width / diameter | 30 mm |
| height / length | 70 mm |
| **ambient conditions** | |
| operating temperature | -25 ... +60 °C |
| protection class | IP 67 |

## dimension drawings

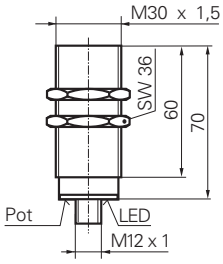


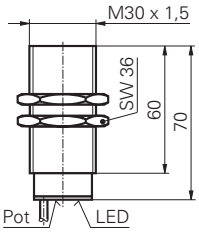


## connection diagrams

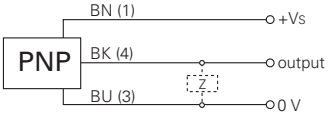


## typical sonic cone profile

**typical sonic beam of ultrasonic sensors with sensing range 200...1500 mm**
standard target 100 x 100 mm, positioned perpendicularly to sensor's reference axis

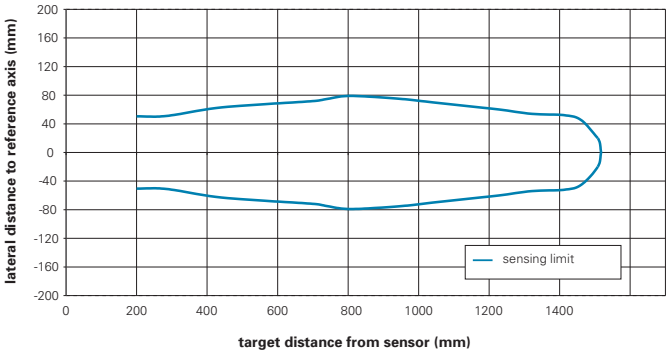


| connectors and mating connectors | |
|---|---|
| ESG 34AH0200 | Connector M12, 4 pin, straight, 2 m |
| ESW 33AH0200 | Connector M12, 4 pin, angular, 2 m |
| additional cable connectors and field wireable connectors: see accessories | |

| order reference | output circuit | connection types |
|---|---|---|
| **UNAM 30N1104** | NPN make function (NO) | cable, 2 m |
| **UNAM 30N1104/S14** | NPN make function (NO) | connector M12 |
| **UNAM 30N3104** | NPN break function (NC) | cable, 2 m |
| **UNAM 30N3104/S14** | NPN break function (NC) | connector M12 |
| **UNAM 30P1104** | PNP make function (NO) | cable, 2 m |
| **UNAM 30P1104/S14** | PNP make function (NO) | connector M12 |
| **UNAM 30P3104** | PNP break function (NC) | cable, 2 m |
| **UNAM 30P3104/S14** | PNP break function (NC) | connector M12 |

## Sd = 2500 mm

- potentiometer
- synchronization output
- long sensing range

| general data | |
|---|---|
| scanning range sd | 350 ... 2500 mm |
| scanning range far limit Sde | 350 ... 2500 mm |
| hysteresis typ. | 4 % Sde |
| repeat accuracy | < 1 mm |
| synchronization | yes |
| temperature drift | < 0,18 % Sde/K |
| adjustment | potentiometer |
| response time ton | < 160 ms |
| release time toff | < 160 ms |
| alignment aid | target indication flashing |
| sonic frequency | 120 kHz |
| output indicator | LED green |
| **electrical data** | |
| voltage supply range +Vs | 12 ... 30 VDC |
| current consumption max. (no load) | 35 mA |
| output current | < 200 mA |
| voltage drop Vd | < 2 VDC |
| residual ripple | < 10 % Vs |
| short circuit protection | yes |
| reverse polarity protection | yes |
| **mechanical data** | |
| type | cylindrical threaded |
| housing material | brass nickel plated |
| width / diameter | 30 mm |
| height / length | 95 mm |
| **ambient conditions** | |
| operating temperature | -25 ... +60 °C |
| protection class | IP 67 |

| connectors and mating connectors | |
|---|---|
| ESG 34AH0200 | Connector M12, 4 pin, straight, 2 m |
| ESW 33AH0200 | Connector M12, 4 pin, angular, 2 m |
| additional cable connectors and field wireable connectors: see accessories | |

| order reference | output circuit | connection types |
|---|---|---|
| **UNAM 50N1721** | NPN make function (NO) | cable, 2 m |
| **UNAM 50N1721/S14** | NPN make function (NO) | connector M12 |
| **UNAM 50N3721** | NPN break function (NC) | cable, 2 m |
| **UNAM 50N3721/S14** | NPN break function (NC) | connector M12 |
| **UNAM 50P1721** | PNP make function (NO) | cable, 2 m |
| **UNAM 50P1721/S14** | PNP make function (NO) | connector M12 |
| **UNAM 50P3721** | PNP break function (NC) | cable, 2 m |
| **UNAM 50P3721/S14** | PNP break function (NC) | connector M12 |

### dimension drawings

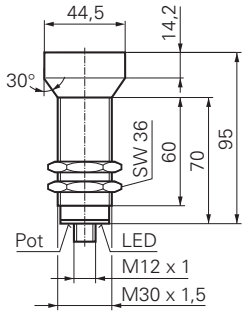


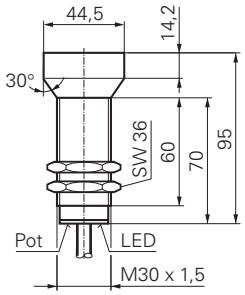


### connection diagrams

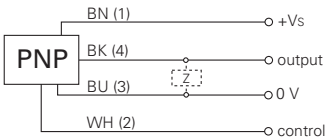


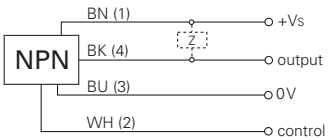


### typical sonic cone profile

**typical sonic beam of ultrasonic sensors with sensing range 400...2500 mm**
standard target with 100 x 100 mm, positioned perpendicularly to sensor's reference axis

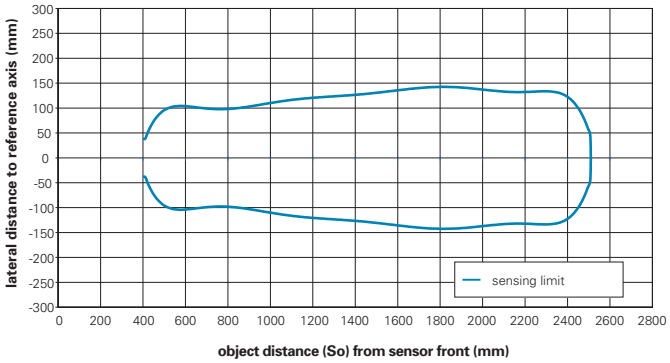

# Ultrasonic 2 point proximity switches

| | |
|---|---|
| Introduction | Page 82 |
| Overview | Page 83 |
| Rectangular designs | Page 84 |
| Cylindrical designs | Page 88 |

## The button that thinks

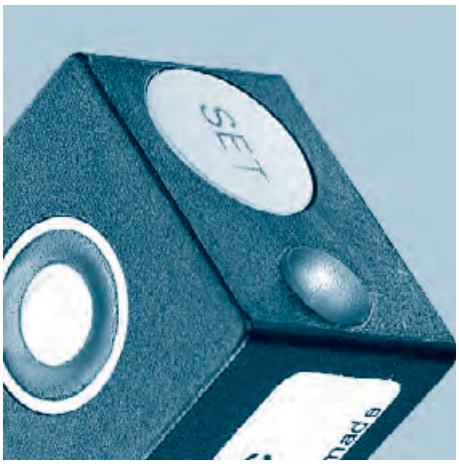


Ultrasonic sensors with the "Teach-in" function are similar to the standard range of products but have the added versatility of a simple touch key set up. The switching points (Sde 1 and Sde 2) may be easily programmed within the sensing range by means of the built-in Teach-in button.

## Simple operation

### Adjustment switching point Sde 1

1. Adjustment mode:

   Press the Teach-in button for approximately 2 secs until the LED flashes green. Release button.
2. LED flashes green. Place the target at the required scanning range and press the Teach-in button.
3. Successful completion of Teach-in procedure is confirmed by LED „on“ for approximately 2 secs.

### Adjustment switching point Sde 2

1. Adjustment mode:

   Press the Teach-in button for approximately 4 secs until the LED flashes yellow. Release button.
2. LED flashes yellow. Place the target at the required scanning range and press the Teach-in button.
3. Successful completion of Teach-in procedure is confirmed by LED „on“ for approximately 2 secs.

### Resetting to original factory settings

Holding the button down for > 6 secs, will automatically restore the original factory setting. Fast flashing of the green/yellow LED indicates successful completion of the resetting.

### Functional diagram

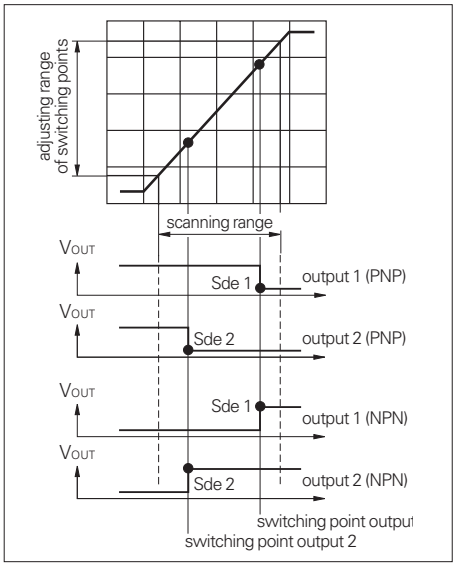


## Options

- Remote Teach-in input
- Synchronization- / Multiplex output

## Advantages

- Set up configuration is saved on an internal EEPROM ensuring long term stability.
- Simple one button set up, no tools required.
- Teach-in lock: the Teach-in function is locked five minutes after power up or five minutes after the end of the last Teach-in process.

## rectangular designs

| product family | UZDK 30 | UZDK 30 | UZDK 30 | UZDK 30 |
|---|---|---|---|---|
| | | | | |
| width / diameter | 30 mm | 30 mm | 30 mm | 30 mm |
| scanning range sd | 30 ... 250 mm | 60 ... 400 mm | 100 ... 1000 mm | 200 ... 2000 mm |
| Teach-in | ■ | ■ | ■ | ■ |
| repeat accuracy | < 0,5 mm | < 0,5 mm | < 0,5 mm | < 1 mm |
| operating temperature | -10 ... +60 °C | -10 ... +60 °C | -10 ... +60 °C | -10 ... +60 °C |
| housing material | polyester / die-cast zinc | polyester / die-cast zinc | polyester / die-cast zinc | polyester / die-cast zinc |
| cable, 2 m | ■ | | ■ | ■ |
| connector M12 | ■ | ■ | ■ | ■ |
| protection class | IP 67 | IP 67 | IP 67 | IP 67 |
| **page** | **84** | **85** | **86** | **87** |

## cylindrical designs

| product family | UZAM 30 | UZAM 50 |
|---|---|---|
| | | |
| width / diameter | 30 mm | 30 mm |
| scanning range sd | 100 ... 1000 mm | 350 ... 2500 mm |
| Teach-in | ■ | ■ |
| repeat accuracy | < 0,5 mm | < 1 mm |
| operating temperature | -10 ... +60 °C | -10 ... +60 °C |
| housing material | brass nickel plated | brass nickel plated |
| cable, 2 m | ■ | ■ |
| connector M12 | ■ | ■ |
| protection class | IP 67 | IP 67 |
| **page** | **88** | **89** |

## Sd = 250 mm

- Teach-in
- small blind range
- two separate outputs

| general data | |
|---|---|
| special type | 2 point proximity switch |
| scanning range sd | 30 ... 250 mm |
| scanning range far limit Sde | 30 ... 250 mm |
| hysteresis typ. | 5 % Sde |
| repeat accuracy | < 0,5 mm |
| temperature drift | < 2 % Sde |
| adjustment | Teach-in |
| response time ton | < 20 ms |
| release time toff | < 20 ms |
| alignment aid | target indication flashing |
| sonic frequency | 300 kHz |
| output indicator | green / yellow LED |
| **electrical data** | |
| voltage supply range +Vs | 12 ... 30 VDC |
| current consumption max. (no load) | 40 mA |
| output circuit | PNP make function (NO) |
| output current | < 200 mA |
| voltage drop Vd | < 2 VDC |
| residual ripple | < 10 % Vs |
| short circuit protection | yes |
| reverse polarity protection | yes |
| **mechanical data** | |
| type | rectangular |
| housing material | polyester / die-cast zinc |
| width / diameter | 30 mm |
| height / length | 65 mm |
| depth | 31 mm |
| **ambient conditions** | |
| operating temperature | -10 ... +60 °C |
| protection class | IP 67 |

| connectors and mating connectors | |
|---|---|
| ESG 34AH0200 | Connector M12, 4 pin, straight, 2 m |
| ESW 33AH0200 | Connector M12, 4 pin, angular, 2 m |
| additional cable connectors and field wireable connectors: see accessories | |
| **Accessories** | |
| 10152386 | Sensofix series 30 |
| for details: see accessories section | |

| order reference | connection types |
|---|---|
| **UZDK 30P6113** | cable, 2 m |
| **UZDK 30P6113/S14** | connector M12 |

### dimension drawings

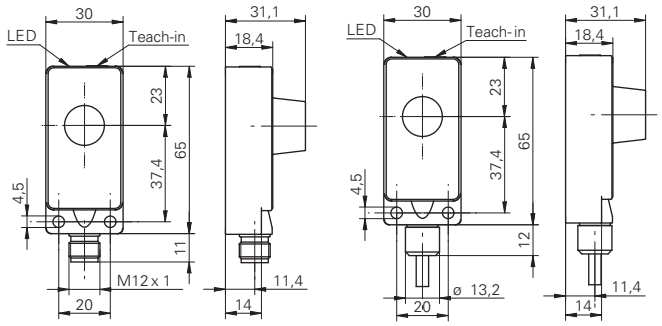


### connection diagram

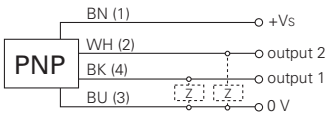


### typical sonic cone profile

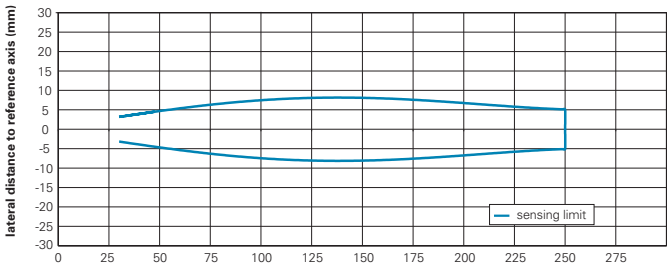


standard square target, size 15 x 15 mm, positioned perpendicularly to sensor's reference axis

## Sd = 400 mm

- Teach-in
- two separate outputs

| general data | |
|---|---|
| special type | 2 point proximity switch |
| scanning range sd | 60 ... 400 mm |
| scanning range far limit Sde | 60 ... 400 mm |
| hysteresis typ. | 4 % Sde |
| repeat accuracy | < 0,5 mm |
| temperature drift | < 2 % Sde |
| adjustment | Teach-in |
| response time ton | < 30 ms |
| release time toff | < 30 ms |
| alignment aid | target indication flashing |
| sonic frequency | 400 kHz |
| output indicator | green / yellow LED |
| **electrical data** | |
| voltage supply range +Vs | 12 ... 30 VDC |
| current consumption max. (no load) | 40 mA |
| output current | < 200 mA |
| voltage drop Vd | < 2 VDC |
| residual ripple | < 10 % Vs |
| short circuit protection | yes |
| reverse polarity protection | yes |
| **mechanical data** | |
| type | rectangular |
| housing material | polyester / die-cast zinc |
| width / diameter | 30 mm |
| height / length | 65 mm |
| depth | 31 mm |
| connection types | connector M12 |
| **ambient conditions** | |
| operating temperature | -10 ... +60 °C |
| protection class | IP 67 |

| connectors and mating connectors | |
|---|---|
| ESG 34AH0200 | Connector M12, 4 pin, straight, 2 m |
| ESW 33AH0200 | Connector M12, 4 pin, angular, 2 m |
| additional cable connectors and field wireable connectors: see accessories | |
| **Accessories** | |
| 10152386 | Sensofix series 30 |
| for details: see accessories section | |

| order reference | output circuit |
|---|---|
| **UZDK 30N6112/S14** | NPN make function (NO) |
| **UZDK 30P6112/S14** | PNP make function (NO) |

### dimension drawing

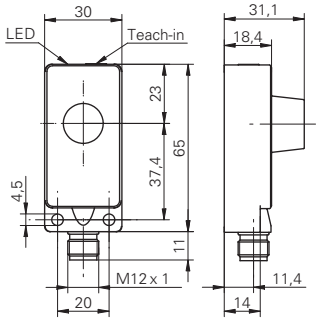


### connection diagrams

### typical sonic cone profile

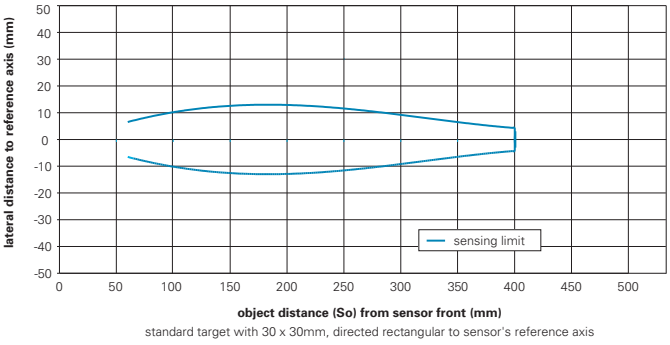


standard target with 30 x 30mm, directed rectangular to sensor's reference axis

## Sd = 1000 mm

- Teach-in
- two separate outputs

| general data | |
|---|---|
| special type | 2 point proximity switch |
| scanning range sd | 100 ... 1000 mm |
| scanning range far limit Sde | 100 ... 1000 mm |
| hysteresis typ. | 4 % Sde |
| repeat accuracy | < 0,5 mm |
| temperature drift | < 2 % Sde |
| adjustment | Teach-in |
| response time ton | < 40 ms |
| release time toff | < 40 ms |
| alignment aid | target indication flashing |
| sonic frequency | 240 kHz |
| output indicator | green / yellow LED |
| **electrical data** | |
| voltage supply range +Vs | 12 ... 30 VDC |
| current consumption max. (no load) | 40 mA |
| output circuit | PNP make function (NO) |
| output current | < 200 mA |
| voltage drop Vd | < 2 VDC |
| residual ripple | < 10 % Vs |
| short circuit protection | yes |
| reverse polarity protection | yes |
| **mechanical data** | |
| type | rectangular |
| housing material | polyester / die-cast zinc |
| width / diameter | 30 mm |
| height / length | 65 mm |
| depth | 31 mm |
| **ambient conditions** | |
| operating temperature | -10 ... +60 °C |
| protection class | IP 67 |

| connectors and mating connectors | |
|---|---|
| ESG 34AH0200 | Connector M12, 4 pin, straight, 2 m |
| ESW 33AH0200 | Connector M12, 4 pin, angular, 2 m |
| additional cable connectors and field wireable connectors: see accessories | |
| **Accessories** | |
| 10152386 | Sensofix series 30 |
| for details: see accessories section | |

| order reference | connection types |
|---|---|
| **UZDK 30P6103** | cable, 2 m |
| **UZDK 30P6103/S14** | connector M12 |

### dimension drawings

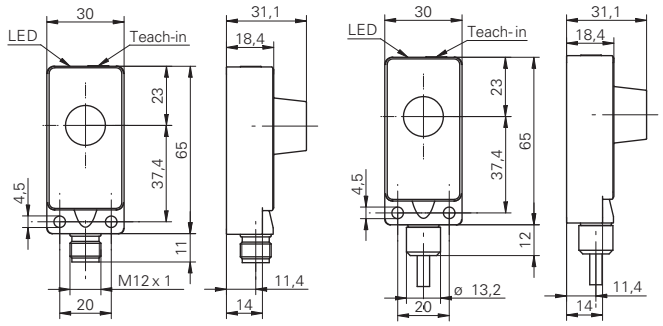


### connection diagram

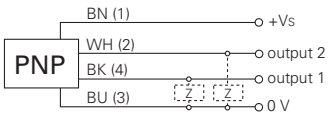


### typical sonic cone profile

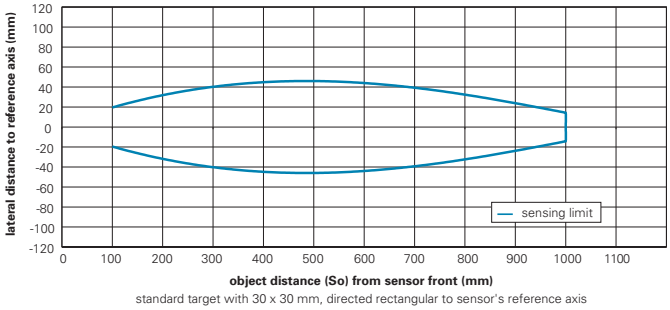


standard target with 30 x 30 mm, directed rectangular to sensor's reference axis

## Sd = 2000 mm

- Teach-in
- two separate outputs

| general data | |
|---|---|
| special type | 2 point proximity switch |
| scanning range sd | 200 ... 2000 mm |
| scanning range far limit Sde | 200 ... 2000 mm |
| hysteresis typ. | 4 % Sde |
| repeat accuracy | < 1 mm |
| temperature drift | < 2 % Sde |
| adjustment | Teach-in |
| response time ton | < 80 ms |
| release time toff | < 80 ms |
| alignment aid | target indication flashing |
| sonic frequency | 200 kHz |
| output indicator | green / yellow LED |
| **electrical data** | |
| voltage supply range +Vs | 12 ... 30 VDC |
| current consumption max. (no load) | 40 mA |
| output circuit | PNP make function (NO) |
| output current | < 200 mA |
| voltage drop Vd | < 2 VDC |
| residual ripple | < 10 % Vs |
| short circuit protection | yes |
| reverse polarity protection | yes |
| **mechanical data** | |
| type | rectangular |
| housing material | polyester / die-cast zinc |
| width / diameter | 30 mm |
| height / length | 65 mm |
| depth | 31 mm |
| **ambient conditions** | |
| operating temperature | -10 ... +60 °C |
| protection class | IP 67 |

| connectors and mating connectors | |
|---|---|
| ESG 34AH0200 | Connector M12, 4 pin, straight, 2 m |
| ESW 33AH0200 | Connector M12, 4 pin, angular, 2 m |
| additional cable connectors and field wireable connectors: see accessories | |
| **Accessories** | |
| 10152386 | Sensofix series 30 |
| for details: see accessories section | |

| order reference | connection types |
|---|---|
| **UZDK 30P6104** | cable, 2 m |
| **UZDK 30P6104/S14** | connector M12 |

### dimension drawings

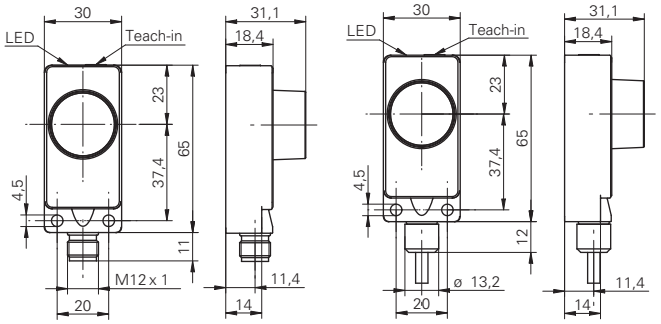


### connection diagram

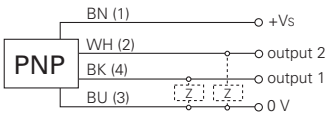


### typical sonic cone profile

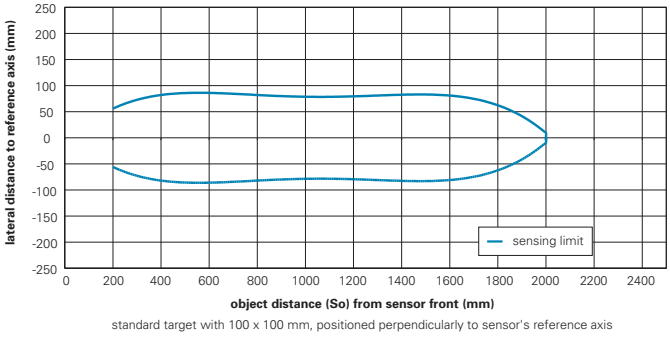


standard target with 100 x 100 mm, positioned perpendicularly to sensor's reference axis

## Sd = 1000 mm

- Teach-in
- two separate outputs
- Multiplex-Function

| general data | |
|---|---|
| special type | 2 point proximity switch |
| scanning range sd | 100 ... 1000 mm |
| scanning range far limit Sde | 100 ... 1000 mm |
| hysteresis typ. | 4 % Sde |
| repeat accuracy | < 0,5 mm |
| temperature drift | < 2 % Sde |
| adjustment | Teach-in |
| response time ton | < 40 ms |
| release time toff | < 40 ms |
| alignment aid | target indication flashing |
| sonic frequency | 240 kHz |
| output indicator | green / yellow LED |
| **electrical data** | |
| voltage supply range +Vs | 12 ... 30 VDC |
| current consumption max. (no load) | 35 mA |
| output current | < 200 mA |
| voltage drop Vd | < 2 VDC |
| residual ripple | < 10 % Vs |
| short circuit protection | yes |
| reverse polarity protection | yes |
| **mechanical data** | |
| type | cylindrical threaded |
| housing material | brass nickel plated |
| width / diameter | 30 mm |
| height / length | 70 mm |
| **ambient conditions** | |
| operating temperature | -10 ... +60 °C |
| protection class | IP 67 |

| connectors and mating connectors | |
|---|---|
| ESG 34AH0200 | Connector M12, 4 pin, straight, 2 m |
| ESW 33AH0200 | Connector M12, 4 pin, angular, 2 m |
| ESG 34CH0200 | Connector M12, 5 pin, straight, 2 m |
| ESW 33CH0200 | Connector M12, 5 pin, angular, 2 m |
| additional cable connectors and field wireable connectors: see accessories | |

### dimension drawings

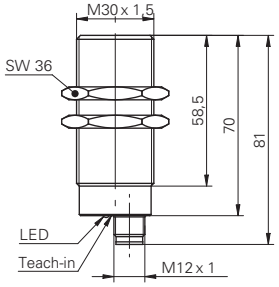


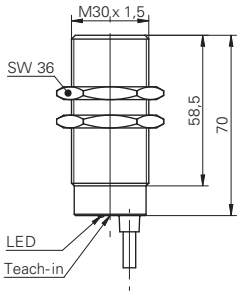


### connection diagrams

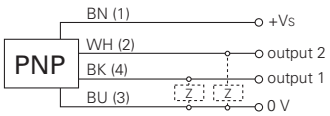


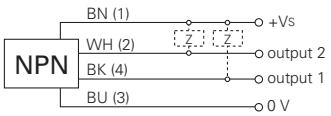


### connection diagram multiplex version

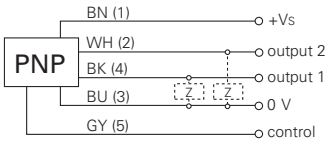


### typical sonic cone profile

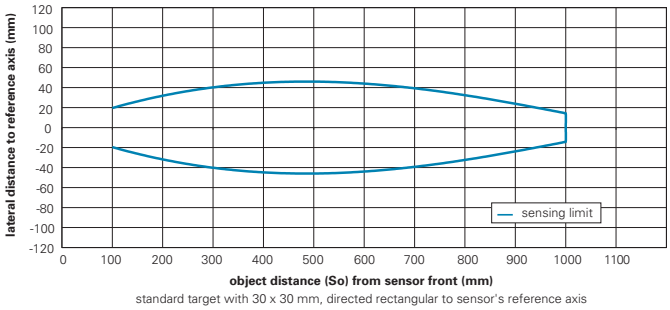


standard target with 30 x 30 mm, directed rectangular to sensor's reference axis

| order reference | version | output circuit | connection types |
|---|---|---|---|
| **UZAM 30N6103/S14** | standard | NPN make function (NO) | connector M12 |
| **UZAM 30P6103** | standard | PNP make function (NO) | cable, 2 m |
| **UZAM 30P6103/S14** | standard | PNP make function (NO) | connector M12 |
| **UZAM 30P6803/S14C** | multiplex version | PNP make function (NO) | connector M12 |

## Sd = 2500 mm

- Teach-in
- two separate outputs
- long sensing range

| general data | |
|---|---|
| special type | 2 point proximity switch |
| scanning range sd | 350 ... 2500 mm |
| scanning range far limit Sde | 350 ... 2500 mm |
| hysteresis typ. | 4 % Sde |
| repeat accuracy | < 1 mm |
| temperature drift | < 2 % Sde |
| adjustment | Teach-in |
| response time ton | < 160 ms |
| release time toff | < 160 ms |
| alignment aid | target indication flashing |
| sonic frequency | 120 kHz |
| output indicator | green / yellow LED |
| **electrical data** | |
| voltage supply range +Vs | 12 ... 30 VDC |
| current consumption max. (no load) | 40 mA |
| output current | < 200 mA |
| voltage drop Vd | < 2 VDC |
| residual ripple | < 10 % Vs |
| short circuit protection | yes |
| reverse polarity protection | yes |
| **mechanical data** | |
| type | cylindrical threaded |
| housing material | brass nickel plated |
| width / diameter | 30 mm |
| height / length | 95 mm |
| **ambient conditions** | |
| operating temperature | -10 ... +60 °C |
| protection class | IP 67 |

| connectors and mating connectors | |
|---|---|
| ESG 34AH0200 | Connector M12, 4 pin, straight, 2 m |
| ESW 33AH0200 | Connector M12, 4 pin, angular, 2 m |
| additional cable connectors and field wireable connectors: see accessories | |

| order reference | output circuit | connection types |
|---|---|---|
| **UZAM 50N6121** | NPN make function (NO) | cable, 2 m |
| **UZAM 50N6121/S14** | NPN make function (NO) | connector M12 |
| **UZAM 50P6121** | PNP make function (NO) | cable, 2 m |
| **UZAM 50P6121/S14** | PNP make function (NO) | connector M12 |

### dimension drawings

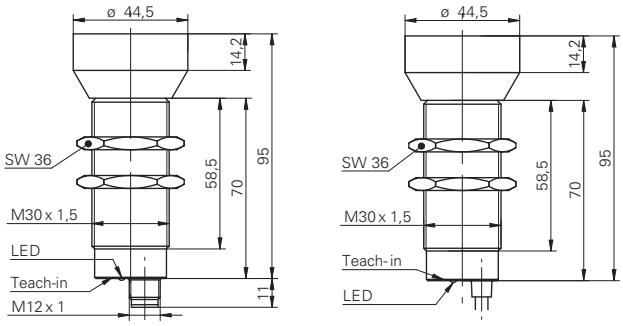


### connection diagrams

### typical sonic cone profile

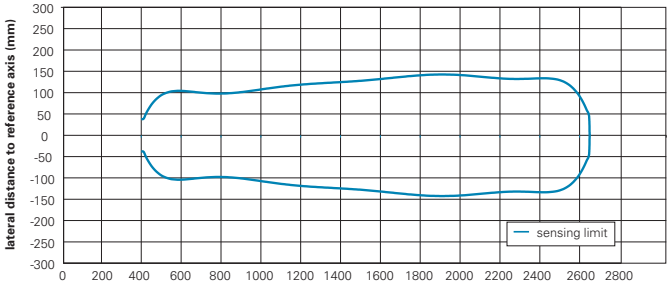


standard target with 100 x 100 mm, positioned perpendicularly to sensor's reference axis

# Ultrasonic retro-reflective sensors

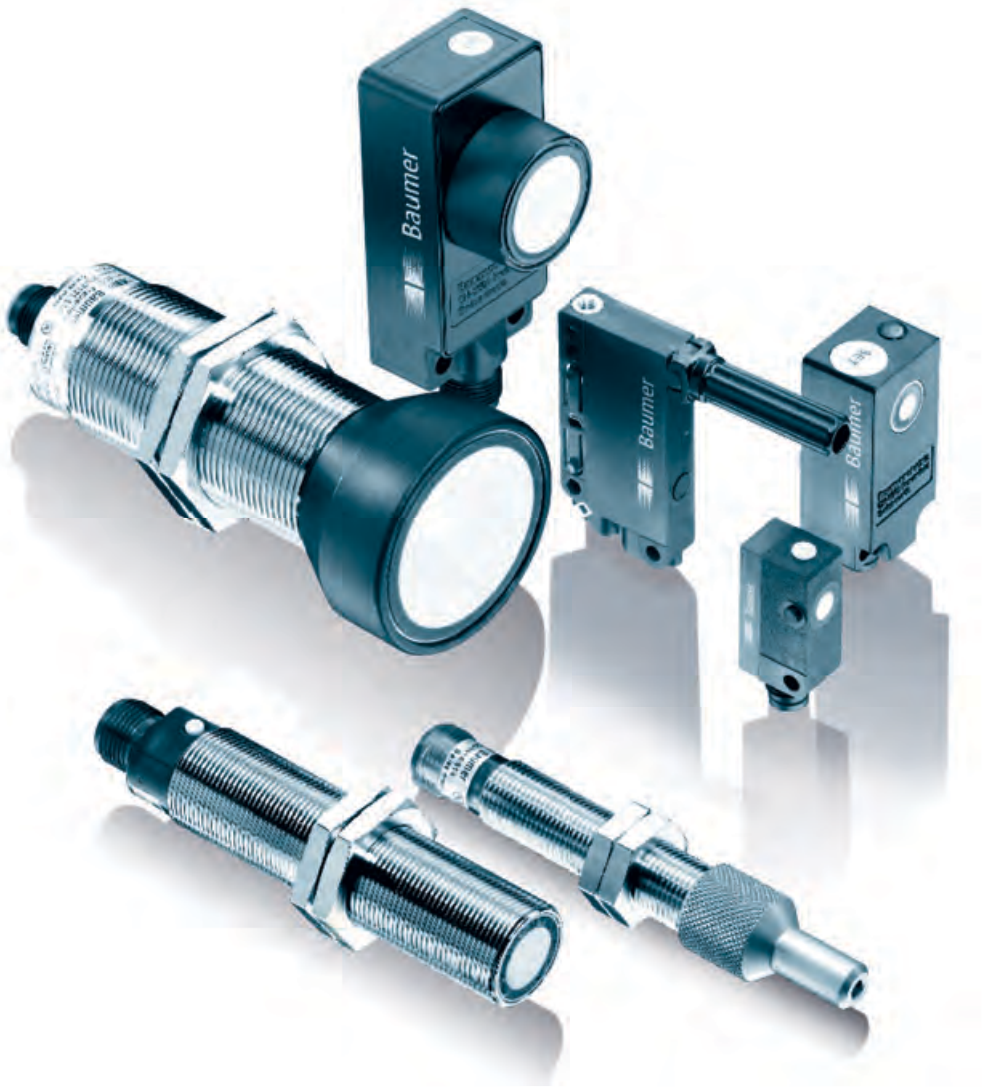



| | |
|---|---|
| Introduction | Page 92 |
| Overview | Page 94 |
| Rectangural designs | Page 96 |
| Cylindrical designs | Page 104 |

## Description

The retro-reflective ultrasonic sensor is similar in operation to the ultrasonic proximity sensor. The distance from the sensor to the reflector or to an object within the sensing distance is determined by measuring the propagation time. Any sound reflecting, stationary object can be used as a reflector. The sensing distance Sd (distance sensor-reflector) can be adjusted to the set up conditions with the sensor's potentiometer.

As long as the measured propagation time of the ultrasonic signal corresponds to the distance from the sensor to the reflector, the device is in the non-active state. When an object comes within the sensing distance, the propagation time changes and the sensor changes to the active state. This also allows detection of sound absorbent and sound deflecting objects.

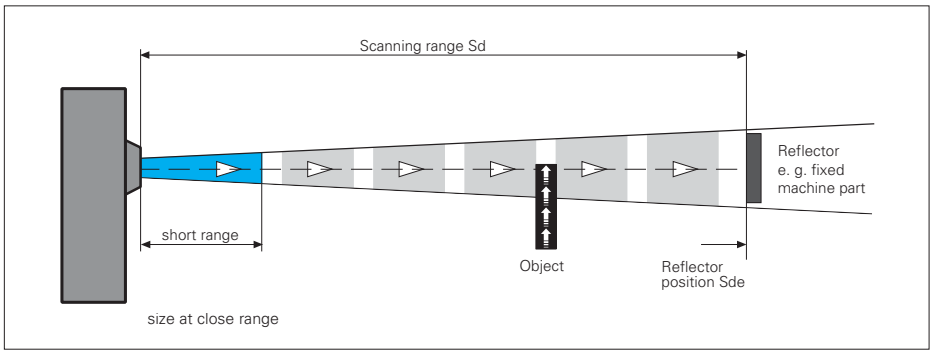


## Setting Sde reflector distance

The sensor's potentiometer allows the user to adjust the set up conditions for a specific reflector position (Sde). The output LED is also an adjustment aid as follows:

**1. Reflector in operating range**
If the setting of Sde deviates from the actual reflector position by less than ±2,5 %, the reflector is in the operating range. The LED lights steadily, the output is inactive.

**2. Reflector in the boundary range**
Up to a deviation of ±5 % the output remains inactive but the LED flashes. This indicates that the setting of Sde is not optimal and needs to be corrected.

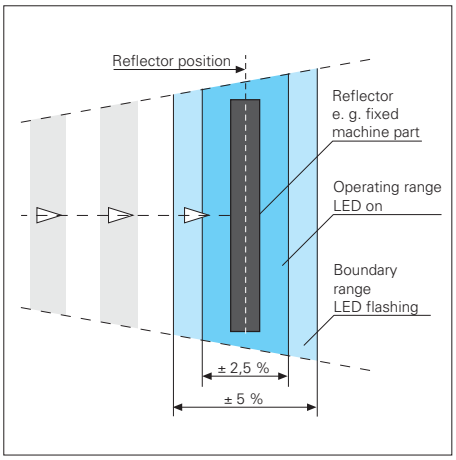


## Retro-reflective sensor with Teach-in

All adjustments are made using the single built-in Teach-in button.

**Teach-in of reflector's position**
To enter the adjustment mode, push the Teach-in button for more than two seconds. You will know you have pushed it long enough by the indicating LED flashing green. When the button is released, the LED continues to flash. Any subsequent push of the button will teach the position of the reflector.

**Resetting to original factory settings**
Connecting the white Teach-in wire to +Vs for > 6 sec, will automatically restore the original factory settings. Fast flashing of the LED indicates successful completion of the resetting.

## Object detection

### Standard object/reflector

The standard target is defined as a square, level object with an edge length of 30 mm (Sde > 1000 mm: 100 mm edge length, Sde ≥ 2500 mm: 300 mm edge length) which is perpendicular to the sensor reference axis. The reflector must be made of a material with good sound reflection properties and be at least the same size as the target.

### Object at close range

For reliable detection, the sound cone must be covered completely so that no echo is returned from the reflector. The object diameter necessary for this is at least 30 mm in URDK 30 and at least 100 mm in URAM 50.

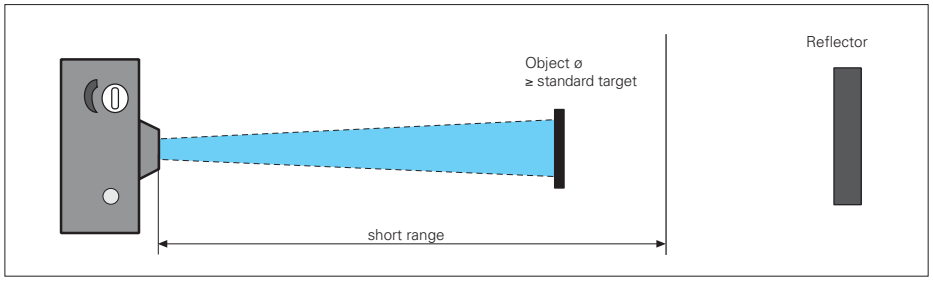


### Object in the rest of the operating range

To ensure reliable object detection, the reflected signal must be strong enough. The strength of the reflected signal is dependent on the size of the object. For a standard object, or larger, the full sensing distance Sd is available.

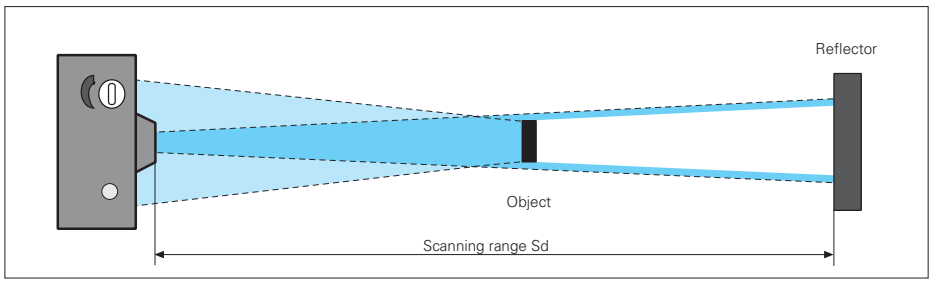


## Advantages

- Easy detection even for 100 % sound absorbent materials
- Reliable detection of sound deflecting objects
- No blind region in front of the sensor for objects ≥ standard object

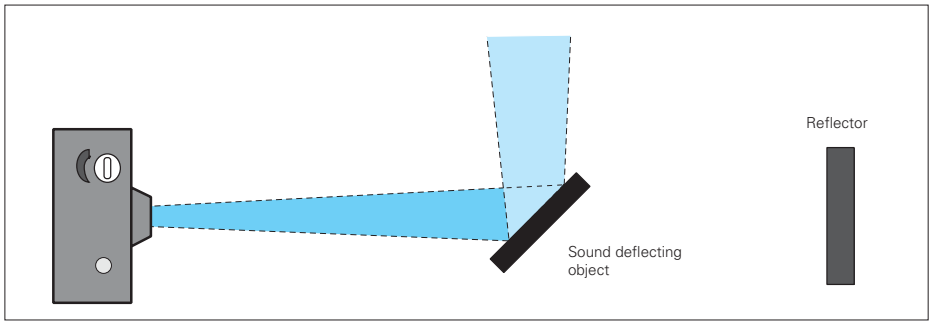

## rectangular designs

| product family | URCK 09 | URDK 09 | URDK 10 | URDK 20 | URDK 20 | URDK 20 | URDK 30 |
|---|---|---|---|---|---|---|---|
| | | | | | | | |
| | | | *SONUS* | | | | |
| width / diameter | 8,6 mm | 8,6 mm | 10,4 mm | 20 mm | 20 mm | 20 mm | 30 mm |
| scanning range sd | 0 ... 200 mm | 0 ... 200 mm | 0 ... 200 mm | 0 ... 200 mm | 0 ... 400 mm | 0 ... 1000 mm | 0 ... 1000 mm |
| potentiometer | | | | | | | ■ |
| Teach-in | ■ | ■ | ■ | ■ | ■ | ■ | |
| repeat accuracy | < 1,5 mm | < 1,5 mm | < 1,5 mm | < 1,5 mm | < 1,5 mm | < 1,5 mm | < 3 mm |
| operating temperature | 0 ... +60 °C | 0 ... +60 °C | -10 ... +60 °C | -10 ... +60 °C | -10 ... +60 °C | -10 ... +60 °C | -10 ... +60 °C |
| housing material | PA 12 | PA 12 | plastic (ASA) | polyester | polyester | polyester | polyester / die-cast zinc |
| cable, 2 m | ■ | ■ | ■ | | | | |
| flylead connector M8, L=200 mm | ■ | ■ | ■ | | | | |
| connector M8 | | | ■ | ■ | ■ | ■ | |
| connector M12 | | | | | | | ■ |
| protection class | IP 67 | IP 67 | IP 67 | IP 67 | IP 67 | IP 67 | IP 67 |
| **page** | **96** | **97** | **98** | **99** | **100** | **101** | **102** |

## cylindrical designs

| product family | URAM 12 | URAM 12 | URAR 18 | URAM 50 |
|---|---|---|---|---|
| | | | | |
| special type | Highspeed | Highspeed | chemically resistant | |
| width / diameter | 12 mm | 12 mm | 18 mm | 30 mm |
| scanning range sd | 0 ... 40 mm | 0 ... 70 mm | 0 ... 400 mm | 0 ... 3000 mm |
| potentiometer | | | | ■ |
| external Teach-in | ■ | ■ | | |
| Teach-in | | | ■ | ■ |
| repeat accuracy | < 1,5 mm | < 1,5 mm | < 1,5 mm | < 3 mm |
| operating temperature | -10 ... +60 °C | -10 ... +60 °C | 0 ... +60 °C | -10 ... +60 °C |
| housing material | brass nickel plated | brass nickel plated | stainless steel 1.4435 (V4A) | brass nickel plated |
| cable, 2 m | | | | ■ |
| connector M12 | ■ | ■ | ■ | ■ |
| protection class | IP 67 | IP 67 | IP 67 | IP 67 |
| **page** | **104** | **105** | **106** | **107** |

| URDK 30 |
| --- |
| |
| |
| 30 mm |
| 0 ... 2000 mm |
| |
| ■ |
| < 3 mm |
| -10 ... +60 °C |
| polyester / die-cast zinc |
| |
| |
| ■ |
| IP 67 |
| 103 |

# Sd = 200 mm

- detects sound absorbing objects
- long sensing range / no blind range
- short response time

| general data | |
|---|---|
| scanning range sd | 0 ... 200 mm |
| reflector position Sde | 60 ... 200 mm |
| adjusting range reflector (operating range) | ± 2,5 % Sde |
| adjusting range reflector (limit range) | ± 5 % Sde |
| repeat accuracy | < 1,5 mm |
| alignment aid | target indication flashing |
| adjustment | Teach-in |
| temperature drift | < 2 % Sde |
| response time ton | < 7 ms |
| release time toff | < 7 ms |
| sonic frequency | 380 kHz |
| output indicator | green LED / red LED |
| **electrical data** | |
| voltage supply range +Vs | 12 ... 30 VDC |
| current consumption max. (no load) | 35 mA |
| output circuit | push-pull |
| output current | < 100 mA |
| voltage drop Vd | < 2 VDC |
| residual ripple | < 10 % Vs |
| short circuit protection | yes |
| reverse polarity protection | yes |
| **mechanical data** | |
| type | rectangular |
| housing material | PA 12 |
| width / diameter | 8,6 mm |
| height / length | 55 mm |
| depth | 24,5 mm |
| **ambient conditions** | |
| operating temperature | 0 ... +60 °C |
| protection class | IP 67 |

| connectors and mating connectors | |
|---|---|
| ESG 32AH0200 | Connector M8, 4 pin, straight, 2 m |
| ESW 31AH0200 | Connector M8, 4 pin, angular, 2 m |
| additional cable connectors and field wireable connectors: see accessories | |

| order reference | connection types |
|---|---|
| URCK 09G8914 | cable, 2 m |
| URCK 09G8914/KS35A | flylead connector M8, L=200 mm |

## dimension drawing

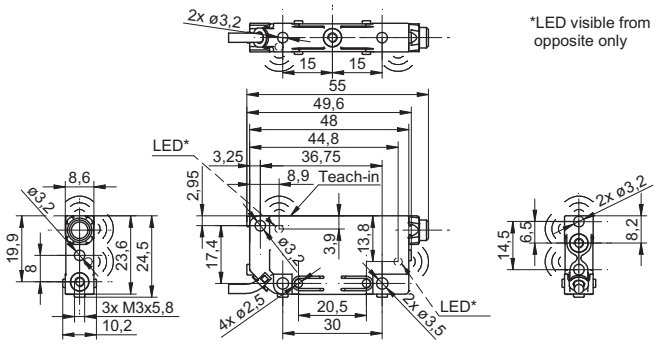


## flylead connector version

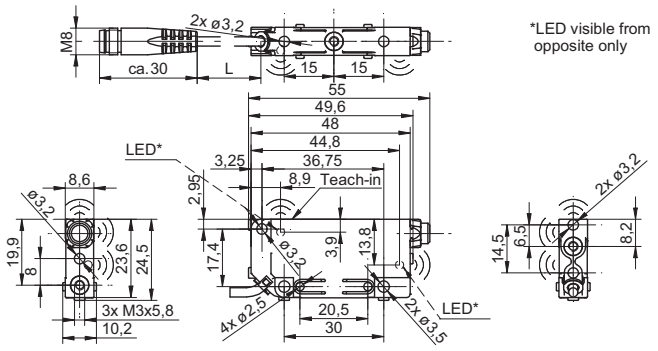


standard cable length 200 mm (L)

## connection diagram

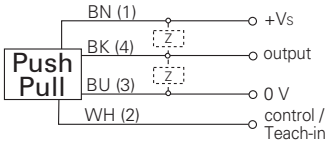


## typical sonic cone profile

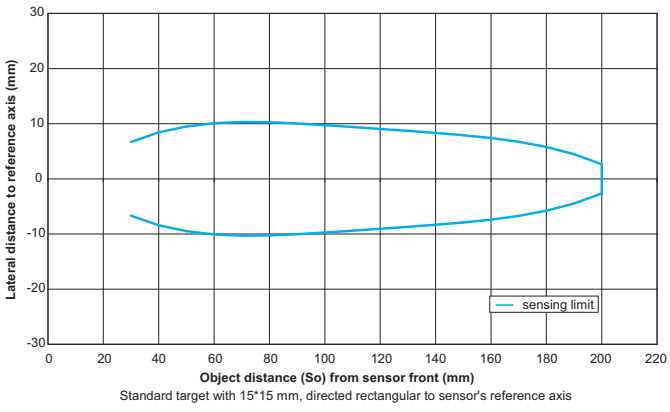


Standard target with 15*15 mm, directed rectangular to sensor's reference axis

# Sd = 200 mm

- detects sound absorbing objects
- long sensing range / no blind range
- short response time

| general data | |
|---|---|
| scanning range sd | 0 ... 200 mm |
| reflector position Sde | 60 ... 200 mm |
| adjusting range reflector (operating range) | ± 2,5 % Sde |
| adjusting range reflector (limit range) | ± 5 % Sde |
| repeat accuracy | < 1,5 mm |
| alignment aid | target indication flashing |
| adjustment | Teach-in |
| temperature drift | < 2 % Sde |
| response time ton | < 7 ms |
| release time toff | < 7 ms |
| sonic frequency | 380 kHz |
| output indicator | green LED / red LED |
| **electrical data** | |
| voltage supply range +Vs | 12 ... 30 VDC |
| current consumption max. (no load) | 35 mA |
| output circuit | push-pull |
| output current | < 100 mA |
| voltage drop Vd | < 2 VDC |
| residual ripple | < 10 % Vs |
| short circuit protection | yes |
| reverse polarity protection | yes |
| **mechanical data** | |
| type | rectangular |
| housing material | PA 12 |
| width / diameter | 8,6 mm |
| height / length | 48,8 mm |
| depth | 30,5 mm |
| **ambient conditions** | |
| operating temperature | 0 ... +60 °C |
| protection class | IP 67 |

| connectors and mating connectors | |
|---|---|
| ESG 32AH0200 | Connector M8, 4 pin, straight, 2 m |
| ESW 31AH0200 | Connector M8, 4 pin, angular, 2 m |
| additional cable connectors and field wireable connectors: see accessories | |

| order reference | connection types |
|---|---|
| **URDK 09G8914** | cable, 2 m |
| **URDK 09G8914/KS35A** | flylead connector M8, L=200 mm |

## dimension drawing

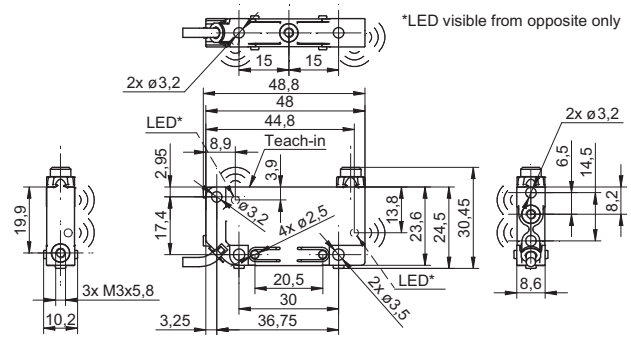


## flylead connector version

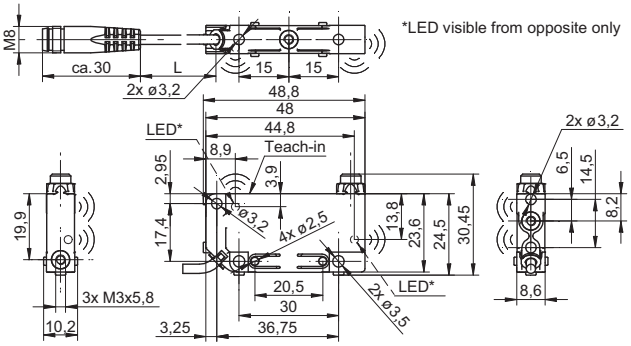


standard cable length 200 mm (L)

## connection diagram

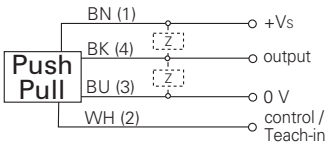


## typical sonic cone profile

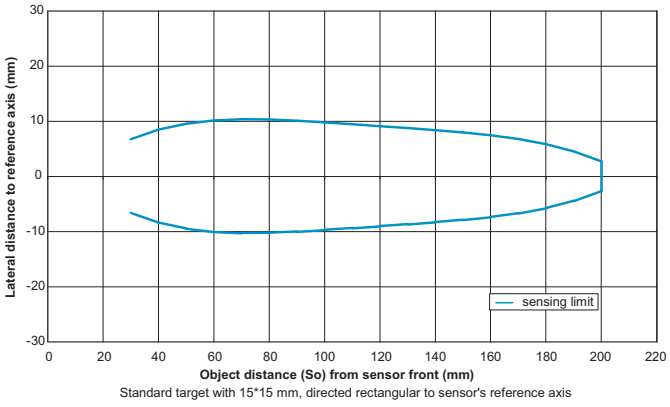


Standard target with 15*15 mm, directed rectangular to sensor's reference axis

# Sd = 200 mm

- small housing dimensions
- very low mass (4 g)
- long sensing range / no blind range

| general data | |
|---|---|
| scanning range sd | 0 ... 200 mm |
| reflector position Sde | 40 ... 200 mm |
| adjusting range reflector (operating range) | ± 2,5 % Sde |
| adjusting range reflector (limit range) | ± 5 % Sde |
| repeat accuracy | < 1,5 mm |
| alignment aid | target indication flashing |
| adjustment | Teach-in |
| temperature drift | < 2 % Sde |
| response time ton | < 15 ms |
| release time toff | < 15 ms |
| sonic frequency | 380 kHz |
| output indicator | LED green |
| **electrical data** | |
| voltage supply range +Vs | 12 ... 30 VDC |
| current consumption max. (no load) | 30 mA |
| output current | < 200 mA |
| voltage drop Vd | < 2 VDC |
| residual ripple | < 10 % Vs |
| short circuit protection | yes |
| reverse polarity protection | yes |
| **mechanical data** | |
| type | rectangular |
| housing material | plastic (ASA) |
| width / diameter | 10,4 mm |
| height / length | 27 mm |
| depth | 14 mm |
| **ambient conditions** | |
| operating temperature | -10 ... +60 °C |
| protection class | IP 67 |
| **connectors and mating connectors** | |
| ESG 32AH0200 | Connector M8, 4 pin, straight, 2 m |
| ESW 31AH0200 | Connector M8, 4 pin, angular, 2 m |
| additional cable connectors and field wireable connectors: see accessories | |
| **Accessories** | |
| 10150326 | Sensofix series 10 / series 20 |
| 10133792 | Mounting bracket series 10 (L design) |
| 10114501 | Mounting bracket series 10 (U design) |
| 10162083 | Mounting panel for sensors series 10 |
| 10118798 | Mounting bracket series 10 |
| 10162376 | Sonic beam deflector for ultrasonic sensors series 10 |
| for details: see accessories section | |

## dimension drawings

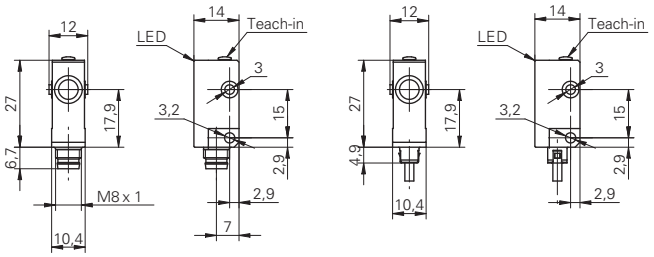


## flylead connector version

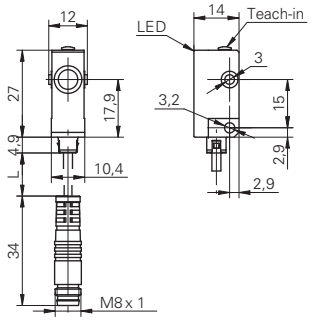


standard cable length 200 mm (L)

## connection diagrams

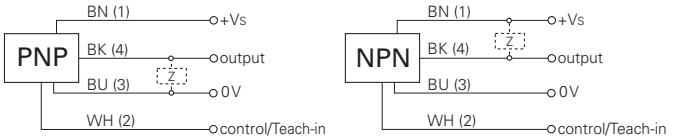


## typical sonic cone profile

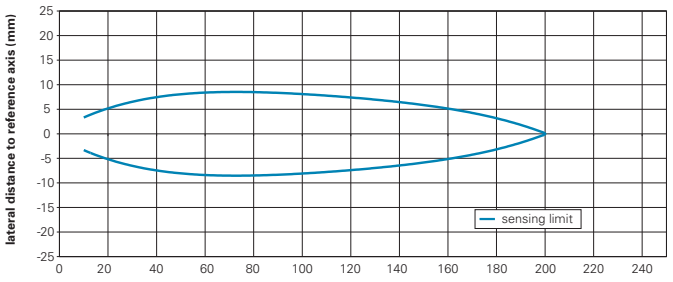


standard square target, size 15 x 15 mm, positioned perpendicularly to sensor's reference axis

| order reference | output circuit | connection types |
|---|---|---|
| **URDK 10N8914** | NPN make function (NO) / break function (NC) | cable, 2 m |
| **URDK 10N8914/KS35A** | NPN make function (NO) / break function (NC) | flylead connector M8, L=200 mm |
| **URDK 10N8914/S35A** | NPN make function (NO) / break function (NC) | connector M8 |
| **URDK 10P8914** | PNP make function (NO) / break function (NC) | cable, 2 m |
| **URDK 10P8914/KS35A** | PNP make function (NO) / break function (NC) | flylead connector M8, L=200 mm |
| **URDK 10P8914/S35A** | PNP make function (NO) / break function (NC) | connector M8 |

# Sd = 200 mm

- internal and external Teach-in
- small sonic beam angle
- compact housing

| general data | |
|---|---|
| scanning range sd | 0 ... 200 mm |
| reflector position Sde | 40 ... 200 mm |
| adjusting range reflector (operating range) | ± 2,5 % Sde |
| adjusting range reflector (limit range) | ± 5 % Sde |
| repeat accuracy | < 1,5 mm |
| alignment aid | target indication flashing |
| adjustment | Teach-in |
| temperature drift | < 2 % Sde |
| response time ton | < 10 ms |
| release time toff | < 10 ms |
| sonic frequency | 380 kHz |
| output indicator | LED green |
| **electrical data** | |
| voltage supply range +Vs | 12 ... 30 VDC |
| current consumption max. (no load) | 35 mA |
| output current | < 200 mA |
| voltage drop Vd | < 2 VDC |
| residual ripple | < 10 % Vs |
| short circuit protection | yes |
| reverse polarity protection | yes |
| **mechanical data** | |
| type | rectangular |
| housing material | polyester |
| width / diameter | 20 mm |
| height / length | 42 mm |
| depth | 15 mm |
| connection types | connector M8 |
| **ambient conditions** | |
| operating temperature | -10 ... +60 °C |
| protection class | IP 67 |

| connectors and mating connectors | |
|---|---|
| ESG 32AH0200 | Connector M8, 4 pin, straight, 2 m |
| ESW 31AH0200 | Connector M8, 4 pin, angular, 2 m |
| additional cable connectors and field wireable connectors: see accessories | |
| **Accessories** | |
| 10150326 | Sensofix series 10 / series 20 |
| 10153290 | Sonic beam deflector series 20 |
| for details: see accessories section | |

| order reference | output circuit |
|---|---|
| **URDK 20N6914/S35A** | NPN make function (NO) |
| **URDK 20N7914/S35A** | NPN break function (NC) |
| **URDK 20P6914/S35A** | PNP make function (NO) |
| **URDK 20P7914/S35A** | PNP break function (NC) |

## dimension drawing

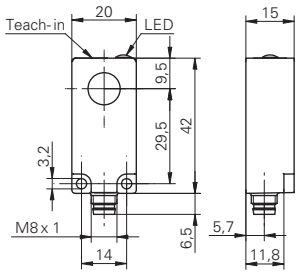


## connection diagrams

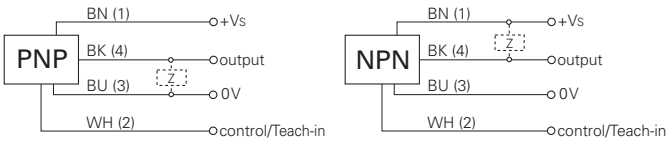


## typical sonic cone profile

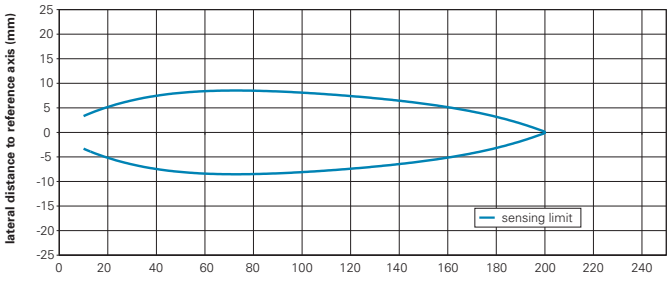


standard square target, size 15 x 15 mm, positioned perpendicularly to sensor's reference axis

# Sd = 400 mm

- internal and external Teach-in
- wide sonic beam angle
- compact housing

| general data | |
|---|---|
| scanning range sd | 0 ... 400 mm |
| reflector position Sde | 100 ... 400 mm |
| adjusting range reflector (operating range) | ± 2,5 % Sde |
| adjusting range reflector (limit range) | ± 5 % Sde |
| repeat accuracy | < 1,5 mm |
| alignment aid | target indication flashing |
| adjustment | Teach-in |
| temperature drift | < 2 % Sde |
| response time ton | < 25 ms |
| release time toff | < 25 ms |
| sonic frequency | 290 kHz |
| output indicator | LED green |
| **electrical data** | |
| voltage supply range +Vs | 12 ... 30 VDC |
| current consumption max. (no load) | 35 mA |
| output current | < 200 mA |
| voltage drop Vd | < 2 VDC |
| residual ripple | < 10 % Vs |
| short circuit protection | yes |
| reverse polarity protection | yes |
| **mechanical data** | |
| type | rectangular |
| housing material | polyester |
| width / diameter | 20 mm |
| height / length | 42 mm |
| depth | 15 mm |
| connection types | connector M8 |
| **ambient conditions** | |
| operating temperature | -10 ... +60 °C |
| protection class | IP 67 |

| connectors and mating connectors | |
|---|---|
| ESG 32AH0200 | Connector M8, 4 pin, straight, 2 m |
| ESW 31AH0200 | Connector M8, 4 pin, angular, 2 m |
| additional cable connectors and field wireable connectors: see accessories | |
| **Accessories** | |
| 10150326 | Sensofix series 10 / series 20 |
| 10153290 | Sonic beam deflector series 20 |
| for details: see accessories section | |

| order reference | output circuit |
|---|---|
| **URDK 20N6912/S35A** | NPN make function (NO) |
| **URDK 20N7912/S35A** | NPN break function (NC) |
| **URDK 20P6912/S35A** | PNP make function (NO) |
| **URDK 20P7912/S35A** | PNP break function (NC) |

## dimension drawing

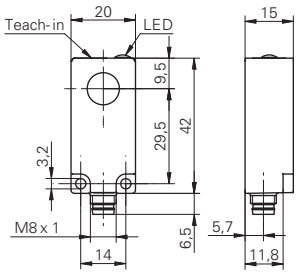


## connection diagrams

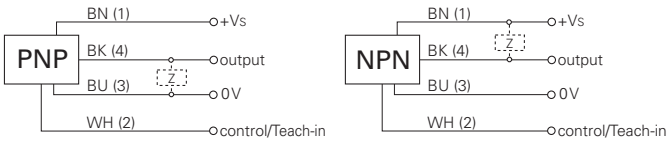


## typical sonic cone profile

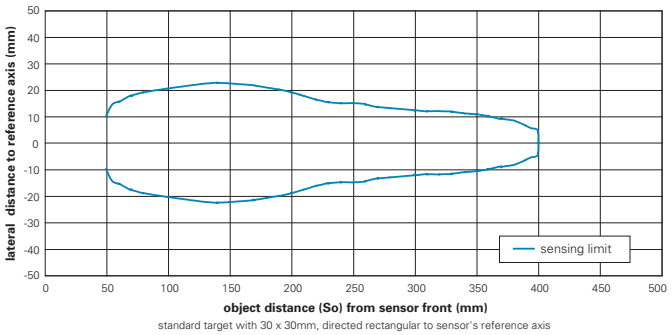


standard target with 30 x 30mm, directed rectangular to sensor's reference axis

# Sd = 1000 mm

- internal and external Teach-in
- small sonic beam angle
- compact housing

| general data | |
|---|---|
| scanning range sd | 0 ... 1000 mm |
| reflector position Sde | 200 ... 1000 mm |
| adjusting range reflector (operating range) | ± 2,5 % Sde |
| adjusting range reflector (limit range) | ± 5 % Sde |
| repeat accuracy | < 1,5 mm |
| alignment aid | target indication flashing |
| adjustment | Teach-in |
| temperature drift | < 2 % Sde |
| response time ton | < 50 ms |
| release time toff | < 50 ms |
| sonic frequency | 240 kHz |
| output indicator | LED green |
| **electrical data** | |
| voltage supply range +Vs | 12 ... 30 VDC |
| current consumption max. (no load) | 35 mA |
| output current | < 200 mA |
| voltage drop Vd | < 2 VDC |
| residual ripple | < 10 % Vs |
| short circuit protection | yes |
| reverse polarity protection | yes |
| **mechanical data** | |
| type | rectangular |
| housing material | polyester |
| width / diameter | 20 mm |
| height / length | 42 mm |
| depth | 15 mm |
| connection types | connector M8 |
| **ambient conditions** | |
| operating temperature | -10 ... +60 °C |
| protection class | IP 67 |

| connectors and mating connectors | |
|---|---|
| ESG 32AH0200 | Connector M8, 4 pin, straight, 2 m |
| ESW 31AH0200 | Connector M8, 4 pin, angular, 2 m |
| additional cable connectors and field wireable connectors: see accessories | |
| **Accessories** | |
| 10150326 | Sensofix series 10 / series 20 |
| 10153290 | Sonic beam deflector series 20 |
| for details: see accessories section | |

| order reference | output circuit |
|---|---|
| **URDK 20N6903/S35A** | NPN make function (NO) |
| **URDK 20N7903/S35A** | NPN break function (NC) |
| **URDK 20P6903/S35A** | PNP make function (NO) |
| **URDK 20P7903/S35A** | PNP break function (NC) |

## dimension drawing

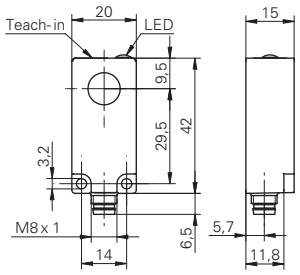


## connection diagrams

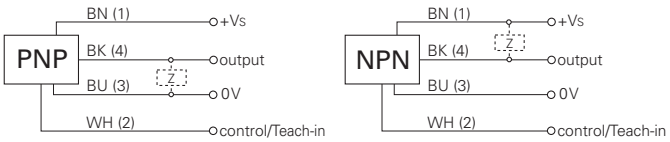


## typical sonic cone profile

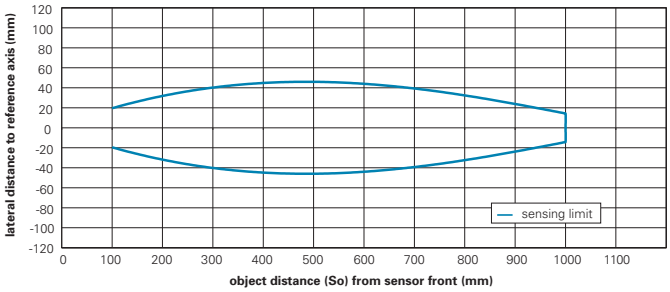


standard target with 30 x 30 mm, directed rectangular to sensor's reference axis

# Sd = 1000 mm

- potentiometer
- synchronization output
- detects sound absorbing objects

| general data | |
|---|---|
| scanning range sd | 0 ... 1000 mm |
| reflector position Sde | 200 ... 1000 mm |
| adjusting range reflector (operating range) | ± 2,5 % Sde |
| adjusting range reflector (limit range) | ± 5 % Sde |
| repeat accuracy | < 3 mm |
| alignment aid | target indication flashing |
| adjustment | potentiometer |
| temperature drift | < 2 % Sde |
| synchronization | yes |
| multiplex version | on request |
| response time ton (sync on) | < 50 ms |
| release time toff (sync on) | < 50 ms |
| sonic frequency | 240 kHz |
| output indicator | LED green |
| **electrical data** | |
| voltage supply range +Vs | 12 ... 30 VDC |
| current consumption max. (no load) | 35 mA |
| output current | < 200 mA |
| voltage drop Vd | < 2 VDC |
| residual ripple | < 10 % Vs |
| short circuit protection | yes |
| reverse polarity protection | yes |
| **mechanical data** | |
| type | rectangular |
| housing material | polyester / die-cast zinc |
| width / diameter | 30 mm |
| height / length | 65 mm |
| depth | 31 mm |
| connection types | connector M12 |
| **ambient conditions** | |
| operating temperature | -10 ... +60 °C |
| protection class | IP 67 |

| connectors and mating connectors | |
|---|---|
| ESG 34AH0200 | Connector M12, 4 pin, straight, 2 m |
| ESW 33AH0200 | Connector M12, 4 pin, angular, 2 m |
| additional cable connectors and field wireable connectors: see accessories | |
| **Accessories** | |
| 10152386 | Sensofix series 30 |
| for details: see accessories section | |

| order reference | output circuit |
|---|---|
| **URDK 30N1703/S14** | NPN make function (NO) |
| **URDK 30N3703/S14** | NPN break function (NC) |
| **URDK 30P1703/S14** | PNP make function (NO) |
| **URDK 30P3703/S14** | PNP break function (NC) |

## dimension drawing

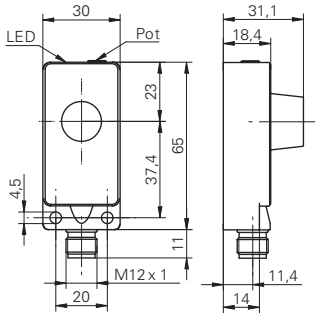


## connection diagrams

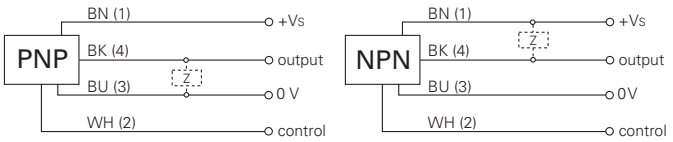


## typical sonic cone profile

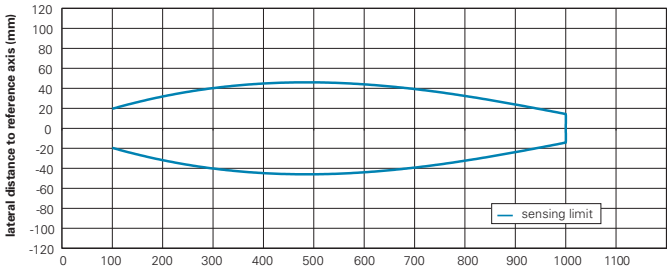


standard target with 30 x 30 mm, directed rectangular to sensor's reference axis

## Sd = 2000 mm

- internal Teach-in
- long sensing range
- detects sound absorbing objects

| general data | |
|---|---|
| scanning range sd | 0 ... 2000 mm |
| reflector position Sde | 400 ... 2000 mm |
| adjusting range reflector (operating range) | ± 4 % Sde |
| adjusting range reflector (limit range) | ± 6 % Sde |
| repeat accuracy | < 3 mm |
| alignment aid | target indication flashing |
| adjustment | Teach-in |
| temperature drift | < 2 % Sde |
| response time ton | < 80 ms |
| release time toff | < 80 ms |
| sonic frequency | 200 kHz |
| output indicator | LED green |
| **electrical data** | |
| voltage supply range +Vs | 12 ... 30 VDC |
| current consumption max. (no load) | 35 mA |
| output current | < 200 mA |
| voltage drop Vd | < 2 VDC |
| residual ripple | < 10 % Vs |
| short circuit protection | yes |
| reverse polarity protection | yes |
| **mechanical data** | |
| type | rectangular |
| housing material | polyester / die-cast zinc |
| width / diameter | 30 mm |
| height / length | 65 mm |
| depth | 31 mm |
| connection types | connector M12 |
| **ambient conditions** | |
| operating temperature | -10 ... +60 °C |
| protection class | IP 67 |

| connectors and mating connectors | |
|---|---|
| ESG 34AH0200 | Connector M12, 4 pin, straight, 2 m |
| ESW 33AH0200 | Connector M12, 4 pin, angular, 2 m |
| additional cable connectors and field wireable connectors: see accessories | |
| **Accessories** | |
| 10152386 | Sensofix series 30 |
| for details: see accessories section | |

| order reference | output circuit |
|---|---|
| **URDK 30P6104/S14** | PNP make function (NO) |
| **URDK 30P7104/S14** | PNP break function (NC) |

### dimension drawing

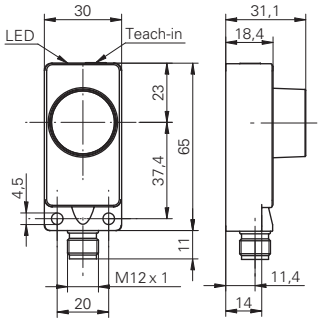


### connection diagram

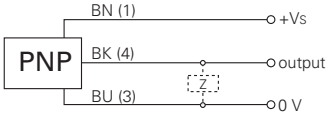


### typical sonic cone profile

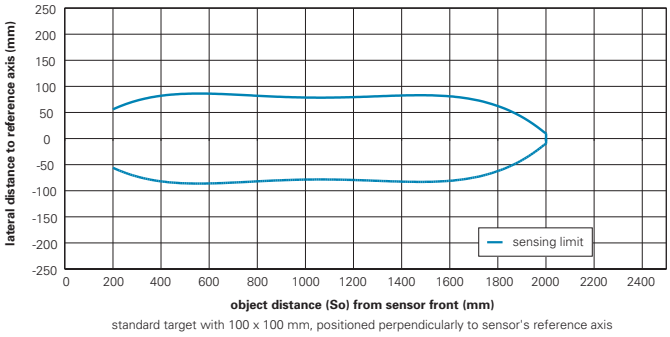


standard target with 100 x 100 mm, positioned perpendicularly to sensor's reference axis

## Sd = 40 mm

- high speed sensors
- with beam columnator for measurement in very small containers
- external Teach-in

| general data | |
|---|---|
| special type | Highspeed |
| scanning range sd | 0 ... 40 mm |
| reflector position Sde | 10 ... 40 mm |
| adjusting range reflector (operating range) | ± 2,5 % Sde |
| adjusting range reflector (limit range) | ± 5 % Sde |
| repeat accuracy | < 1,5 mm |
| alignment aid | target indication flashing |
| adjustment | external Teach-in |
| temperature drift | < 2 % Sde |
| response time ton | < 1,5 ms |
| release time toff | < 1,5 ms |
| switching frequency | < 200 Hz |
| sonic frequency | 380 kHz |
| output indicator | LED green |
| **electrical data** | |
| voltage supply range +Vs | 12 ... 30 VDC |
| current consumption max. (no load) | 35 mA |
| output current | < 200 mA |
| voltage drop Vd | < 2 VDC |
| residual ripple | < 10 % Vs |
| short circuit protection | yes |
| reverse polarity protection | yes |
| **mechanical data** | |
| type | cylindrical threaded |
| housing material | brass nickel plated |
| width / diameter | 12 mm |
| height / length | 100 mm |
| connection types | connector M12 |
| **ambient conditions** | |
| operating temperature | -10 ... +60 °C |
| protection class | IP 67 |

| connectors and mating connectors | |
|---|---|
| ESG 34AH0200 | Connector M12, 4 pin, straight, 2 m |
| ESW 33AH0200 | Connector M12, 4 pin, angular, 2 m |
| additional cable connectors and field wireable connectors: see accessories | |
| **Accessories** | |
| 10151720 | Sensofix series 12 round |
| 10141584 | Teach-in Adapter M12 |
| for details: see accessories section | |

### dimension drawing

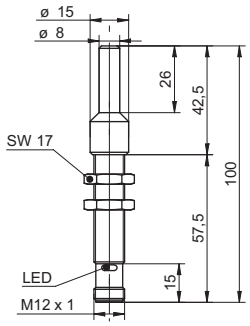


### connection diagrams

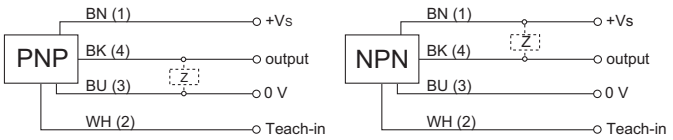


### typical sonic cone profile

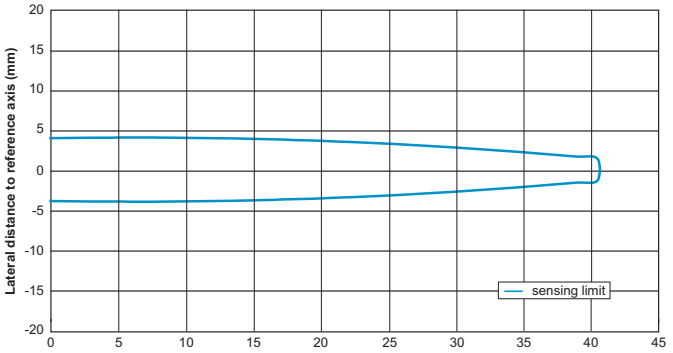


Standard target with 15*15 mm, directed rectangular to sensor's reference axis

| order reference | output circuit |
|---|---|
| **URAM 12N8910/S14OD** | NPN make function (NO) / break function (NC) |
| **URAM 12P8910/S14OD** | PNP make function (NO) / break function (NC) |

## Sd = 70 mm

- high speed sensoren
- small sonic beam angle
- external Teach-in

| general data | |
|---|---|
| special type | Highspeed |
| scanning range sd | 0 ... 70 mm |
| reflector position Sde | 40 ... 70 mm |
| adjusting range reflector (operating range) | ± 2,5 % Sde |
| adjusting range reflector (limit range) | ± 5 % Sde |
| repeat accuracy | < 1,5 mm |
| alignment aid | target indication flashing |
| adjustment | external Teach-in |
| temperature drift | < 2 % Sde |
| response time ton | < 1,5 ms |
| release time toff | < 1,5 ms |
| switching frequency | < 200 Hz |
| sonic frequency | 380 kHz |
| output indicator | LED green |
| **electrical data** | |
| voltage supply range +Vs | 12 ... 30 VDC |
| current consumption max. (no load) | 35 mA |
| output current | < 200 mA |
| voltage drop Vd | < 2 VDC |
| residual ripple | < 10 % Vs |
| short circuit protection | yes |
| reverse polarity protection | yes |
| **mechanical data** | |
| type | cylindrical threaded |
| housing material | brass nickel plated |
| width / diameter | 12 mm |
| height / length | 70 mm |
| connection types | connector M12 |
| **ambient conditions** | |
| operating temperature | -10 ... +60 °C |
| protection class | IP 67 |

| connectors and mating connectors | |
|---|---|
| ESG 34AH0200 | Connector M12, 4 pin, straight, 2 m |
| ESW 33AH0200 | Connector M12, 4 pin, angular, 2 m |
| additional cable connectors and field wireable connectors: see accessories | |
| **Accessories** | |
| 10151720 | Sensofix series 12 round |
| 10141584 | Teach-in Adapter M12 |
| for details: see accessories section | |

### dimension drawing

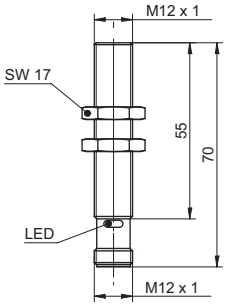


### connection diagrams

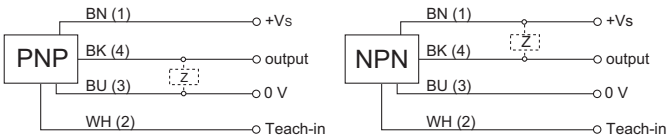


### typical sonic cone profile

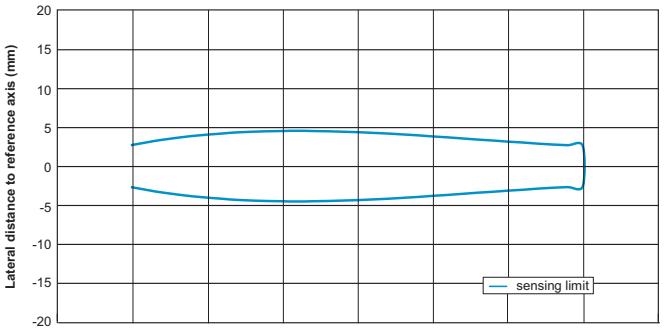


Standard target with 15*15 mm, directed rectangular to sensor's reference axis

| order reference | output circuit |
|---|---|
| **URAM 12N8910/S14O** | NPN make function (NO) / break function (NC) |
| **URAM 12P8910/S14O** | PNP make function (NO) / break function (NC) |

## Sd = 400 mm

- internal and external Teach-in
- sensorfront chemically resistant
- stainless steel housing

| general data | |
|---|---|
| special type | chemically resistant |
| scanning range sd | 0 ... 400 mm |
| reflector position Sde | 120 ... 400 mm |
| repeat accuracy | < 1,5 mm |
| alignment aid | target indication flashing |
| adjustment | Teach-in |
| temperature drift | < 2 % Sde |
| response time ton | < 25 ms |
| release time toff | < 25 ms |
| sonic frequency | 400 kHz |
| output indicator | LED green |
| **electrical data** | |
| voltage supply range +Vs | 12 ... 30 VDC |
| current consumption max. (no load) | 35 mA |
| output current | < 200 mA |
| voltage drop Vd | < 2 VDC |
| residual ripple | < 10 % Vs |
| short circuit protection | yes |
| reverse polarity protection | yes |
| **mechanical data** | |
| type | cylindrical threaded |
| housing material | stainless steel 1.4435 (V4A) |
| width / diameter | 18 mm |
| height / length | 91,5 mm |
| connection types | connector M12 |
| coating active face | Parylene |
| material O-ring | FFKM |
| front of sensor durable against pressure | 6 bar, 20'000 cycle |
| **ambient conditions** | |
| operating temperature | 0 ... +60 °C |
| protection class | IP 67 |

| connectors and mating connectors | |
|---|---|
| ESG 34AH0200 | Connector M12, 4 pin, straight, 2 m |
| ESW 33AH0200 | Connector M12, 4 pin, angular, 2 m |
| additional cable connectors and field wireable connectors: see accessories | |
| **Accessories** | |
| 10151658 | Sensofix series 18 |
| 10164264 | Sonic beam deflector series 18 rectangular |
| for details: see accessories section | |

| order reference | output circuit |
|---|---|
| **URAR 18N6912/S14G** | NPN make function (NO) |
| **URAR 18N7912/S14G** | NPN break function (NC) |
| **URAR 18P6912/S14G** | PNP make function (NO) |
| **URAR 18P7912/S14G** | PNP break function (NC) |

### dimension drawing

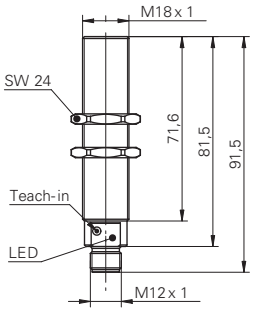


### connection diagrams

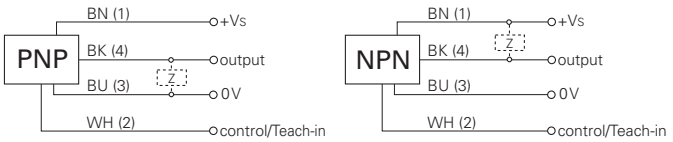


### typical sonic cone profile

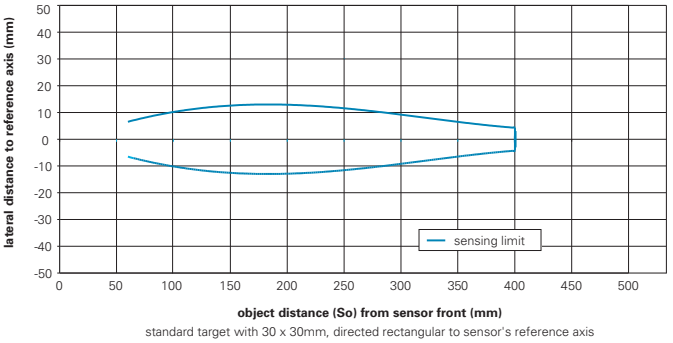


standard target with 30 x 30mm, directed rectangular to sensor's reference axis

## Sd = 3000 mm

- Teach-in or potentiometer
- synchronization output
- long sensing range

| general data | |
|---|---|
| scanning range sd | 0 ... 3000 mm |
| reflector position Sde | 600 ... 3000 mm |
| adjusting range reflector (operating range) | ± 4 % Sde |
| adjusting range reflector (limit range) | ± 6 % Sde |
| repeat accuracy | < 3 mm |
| alignment aid | target indication flashing |
| synchronization | yes |
| multiplex version | on request |
| response time ton | < 160 ms |
| release time toff | < 160 ms |
| sonic frequency | 120 kHz |
| output indicator | LED green |
| **electrical data** | |
| voltage supply range +Vs | 12 ... 30 VDC |
| current consumption max. (no load) | 35 mA |
| output current | < 200 mA |
| voltage drop Vd | < 2 VDC |
| residual ripple | < 10 % Vs |
| short circuit protection | yes |
| reverse polarity protection | yes |
| **mechanical data** | |
| type | cylindrical threaded |
| housing material | brass nickel plated |
| width / diameter | 30 mm |
| height / length | 95 mm |
| **ambient conditions** | |
| operating temperature | -10 ... +60 °C |
| protection class | IP 67 |

| connectors and mating connectors | |
|---|---|
| ESG 34AH0200 | Connector M12, 4 pin, straight, 2 m |
| ESW 33AH0200 | Connector M12, 4 pin, angular, 2 m |
| additional cable connectors and field wireable connectors: see accessories | |

### dimension drawings

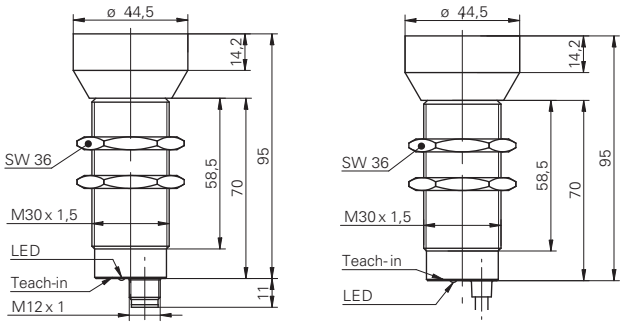


Teach-in = Teach-in or potentiometer

### connection diagrams

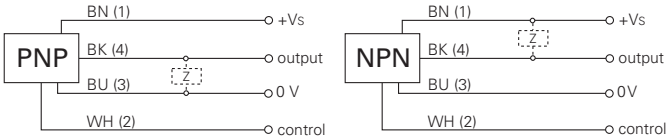


### typical sonic cone profile

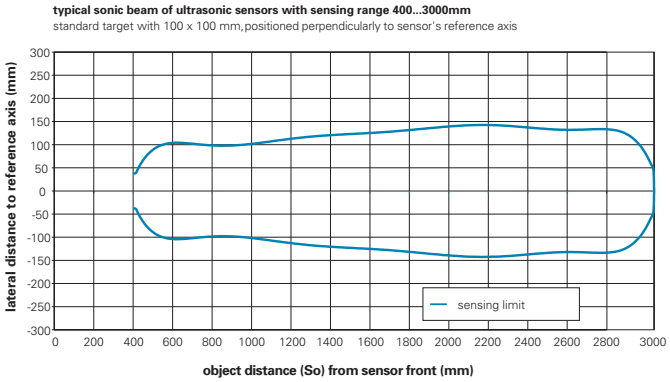


| order reference | adjustment | output circuit | temperature drift | connection types |
|---|---|---|---|---|
| **URAM 50N1721** | potentiometer | NPN make function (NO) | < 0,18 % Sde/K | cable, 2 m |
| **URAM 50N1721/S14** | potentiometer | NPN make function (NO) | < 0,18 % Sde/K | connector M12 |
| **URAM 50P6121** | Teach-in | PNP make function (NO) | < 2 % Sde | cable, 2 m |
| **URAM 50P6121/S14** | Teach-in | PNP make function (NO) | < 2 % Sde | connector M12 |
| **URAM 50P7121** | Teach-in | PNP break function (NC) | < 2 % Sde | cable, 2 m |
| **URAM 50P7121/S14** | Teach-in | PNP break function (NC) | < 2 % Sde | connector M12 |

# Ultrasonic through beam sensors

Introduction Page 110
Rectangular designs Page 112

## Description

The emitter and the receiver are in two separate housings. The continuous signal by the emitter is picked up by the receiver. An object interrupting the sonic beam will make the receiver react by giving an output signal. The user may adjust the amplification of the input signal where required.
When an object interrupts the sonic beam, the receiver will react and give an output signal. With the help of the built in potentiometer, the user can adjust the amplification of the input signal, as necessary.
The state of the output stage as well as the signal intensity are indicated by an LED.

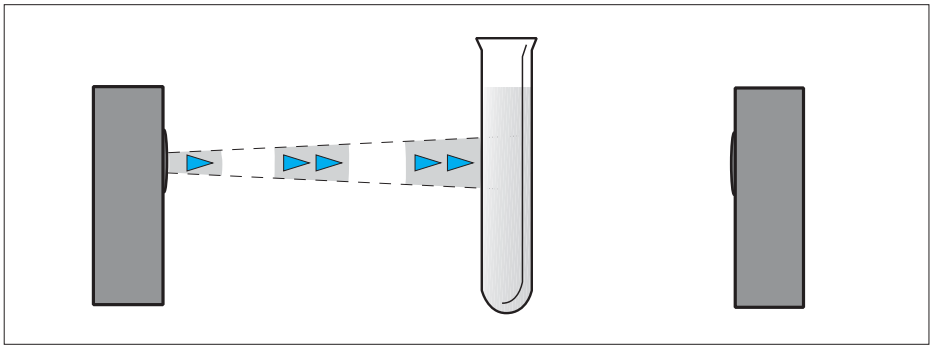

**Hysteresis**
Hysteresis is the difference between the operating point (S1) and the release point (S2). If an object interrupts the sonic beam, the signal level must be increased by about 75 % in order to reset the output signal. Objects which follow one another in quick succession can therefore be easily detected.

**Sonic beam angle $\alpha$**
The sonic beam angle ($\alpha$) defines the boundaries of the emitted conical beam of the ultrasonic through beam sensor.

**Repeatability**
Due to the narrow angle of the sonic beam the repeatability of the switching point of two successive targets, under identical conditions, is better than 3 mm.

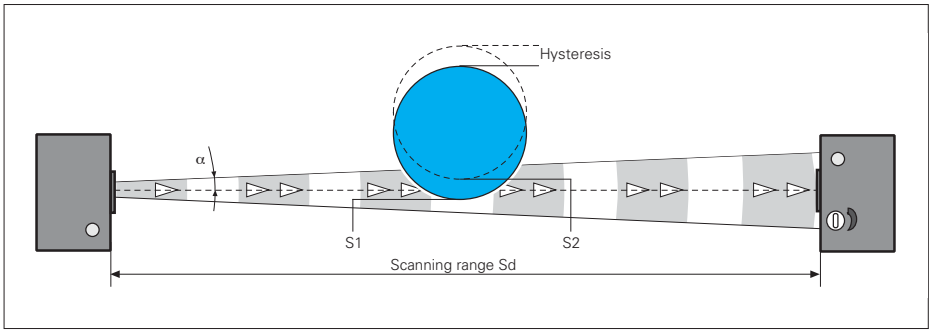

## Teach-in procedure Series 20

All adjustments can be made with the internal Teach-in key.

**Sensitivity Adjustment**

The LEDs on the display indicate the receiver's sensitivity. The sensitivity can be called up at any time by pressing the Teach-in key, even with locked teaching functionality.

Move the emitter and receiver to the desired position.

Switch the emitter to its adjustment mode by pressing and holding the Teach-in key for approx. two seconds until the green LED begins flashing. Release the Teach-in key. The green LED now indicates the switching state. Press the Teach-in key repeatedly until the desired sensitivity is achieved and the green LED is continuously on. Sensitivity is indicated by the yellow LEDs on the display.

To complete the Teach-in process, press and hold the Teach-in key for approx. two seconds until the green LED begins flashing rapidly. Release the Teach-in key.
The LED is off!

**Response Time**

Switch the sensor to teach mode by pressing and holding the Teach-in key for approx. four seconds until the red LED begins flashing. Release the Teach-in key. The red LED lights up continuously. Press the Teach-in key repeatedly until the desired response time is achieved.

LED display:

no LED on; approximately 5 ms response time delay
1. LED on; approximately 10 ms response time delay
2. LED on; approximately 20 ms response time delay
3. LED on; approximately 40 ms response time delay
4. LED on; approximately 80 ms response time delay
5. LED on; approximately 160 ms response time delay
6. LED on; approximately 320 ms response time delay

To complete the Teach-in process, press and hold the Teach-in key for approx. two seconds until the red LED begins flashing rapidly. Release the Teach-in key. The response time is now set.

**Resetting the receiver to its original factory settings**

Pressing and holding the Teach-in key for longer than six seconds will return the sensor to its factory settings. This is indicated on the receiver by the rapid flashing of the green/red LED.

**Teach-in lock**

The Teach-in function is locked five minutes after power up or five  minutes after the end of the last Teach-in process.

# Sd = 1000 mm

- Teach-in
- LED Display
- response time adjustable <= 5 … 320 ms

| general data | |
|---|---|
| scanning range sd | 0 ... 1000 mm |
| scanning range far limit Sde | 0 ... 1000 mm |
| alignment aid | target indication flashing |
| **receiver** | |
| object size (at Sd = 50 mm) | > 2 cm² |
| hysteresis typ. | 5 mm |
| repeat accuracy | < 3 mm |
| response time ton | < 5 ms |
| release time toff | < 5 ms |
| adjustment | Teach-in |
| output indicator | LED green |
| **emitter** | |
| sonic frequency | 250 kHz |
| power on indication | LED yellow |
| **electrical data** | |
| voltage supply range +Vs | 15 ... 30 VDC |
| residual ripple | < 10 % Vs |
| short circuit protection | yes |
| reverse polarity protection | yes |
| **receiver** | |
| current consumption max. (no load) | 30 mA |
| output circuit | PNP make function (NO) |
| output current | < 200 mA |
| voltage drop Vd | < 2 VDC |
| **emitter** | |
| current consumption max. (no load) | 40 mA |
| **mechanical data** | |
| type | rectangular |
| housing material | polyester |
| width / diameter | 20 mm |
| height / length | 42 mm |
| depth | 15 mm |
| connection types | connector M8 |
| **ambient conditions** | |
| operating temperature | 0 ... +60 °C |
| protection class | IP 67 |

| order reference | emitter / receiver |
|---|---|
| **UEDK 20P6103/S35A** | receiver |
| **USDK 20D9003/S35A** | emitter |

## dimension drawings

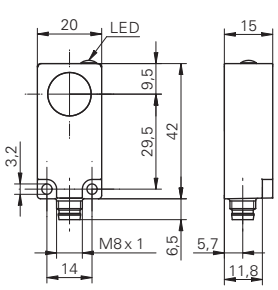


emitter

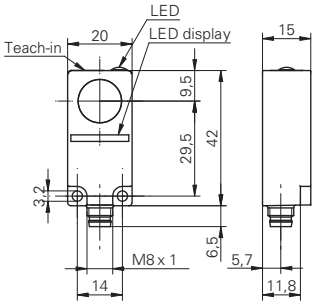


receiver

## connection diagrams

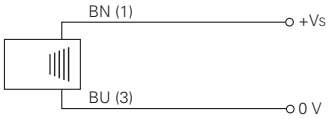


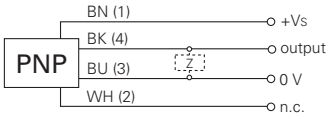


| connectors and mating connectors | |
|---|---|
| ESG 32AH0200 | Connector M8, 4 pin, straight, 2 m |
| ESW 31AH0200 | Connector M8, 4 pin, angular, 2 m |
| additional cable connectors and field wireable connectors: see accessories | |

| Accessories | |
|---|---|
| 10150326 | Sensofix series 10 / series 20 |
| for details: see accessories section | |

# Sd = 700 mm

- potentiometer
- complementary outputs
- response time <= 5 ms

| general data | |
|---|---|
| scanning range sd | 0 ... 700 mm |
| scanning range far limit Sde | 0 ... 700 mm |
| alignment aid | target indication flashing |
| **receiver** | |
| object size (at Sd = 50 mm) | > 2 cm² |
| hysteresis typ. | 5 mm |
| repeat accuracy | < 3 mm |
| response time ton | < 5 ms |
| release time toff | < 5 ms |
| adjustment | potentiometer |
| output indicator | LED green |
| **emitter** | |
| sonic frequency | 220 kHz |
| power on indication | LED yellow |
| **electrical data** | |
| voltage supply range +Vs | 12 ... 30 VDC |
| residual ripple | < 10 % Vs |
| reverse polarity protection | yes |
| **receiver** | |
| current consumption max. (no load) | 30 mA |
| output current | < 200 mA |
| voltage drop Vd | < 2 VDC |
| short circuit protection | yes |
| **emitter** | |
| current consumption max. (no load) | 22 mA |
| **mechanical data** | |
| type | rectangular |
| housing material | polyester / die-cast zinc |
| width / diameter | 30 mm |
| height / length | 65 mm |
| depth | 18,5 mm |
| **ambient conditions** | |
| operating temperature | 0 ... +60 °C |
| protection class | IP 67 |

## dimension drawings connector

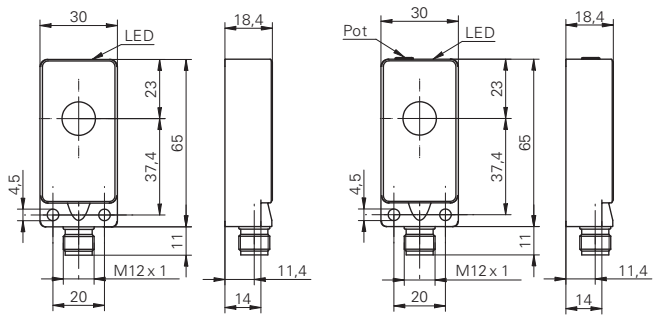


emitter receiver

## dimension drawings cable

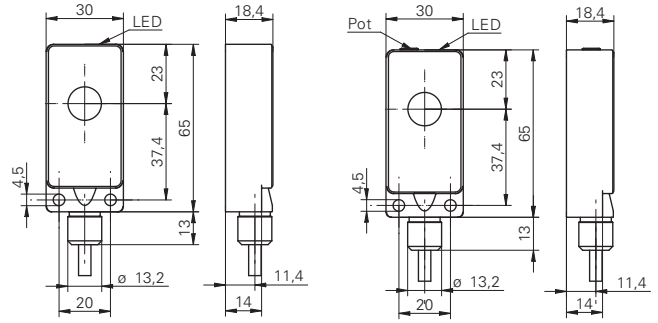


emitter receiver

## connection diagrams

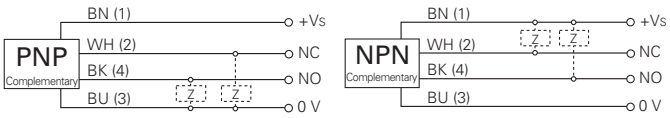


| connectors and mating connectors | |
|---|---|
| ESG 34AH0200 | Connector M12, 4 pin, straight, 2 m |
| ESW 33AH0200 | Connector M12, 4 pin, angular, 2 m |
| additional cable connectors and field wireable connectors: see accessories | |

| Accessories | |
|---|---|
| 10152386 | Sensofix series 30 |
| for details: see accessories section | |

| order reference | emitter / receiver | output circuit | connection types |
|---|---|---|---|
| **UEDK 30N5103** | receiver | NPN complementary | cable, 2 m |
| **UEDK 30N5103/S14** | receiver | NPN complementary | connector M12 |
| **UEDK 30P5103** | receiver | PNP complementary | cable, 2 m |
| **UEDK 30P5103/S14** | receiver | PNP complementary | connector M12 |
| **USDK 30D9003** | emitter | - | cable, 2 m |
| **USDK 30D9003/S14** | emitter | - | connector M12 |

# Accessories

| | |
|---|---|
| Connectors | Page 116 |
| Connectors/Pin assignment | Page 119 |
| Mounting accessories | Page 120 |
| Mounting kits *SENSOFIX* | Page 122 |

## ESW 31 - Connector M8 angular

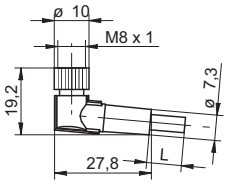


| order reference | |
|---|---|
| ESW 31AH0200 | Connector M8, 4 pin, angular, 2 m |
| ESW 31AH0500 | Connector M8, 4 pin, angular, 5 m |
| ESW 31AH1000 | Connector M8, 4 pin, angular, 10 m |

- Connector unshielded
- 4 pin versions
- Cable coating PUR
- Halogen-free
- Suitable for flexible cable carriers
- UL listed, number E315836

## ESW 31G - Connector M8 angular, shielded

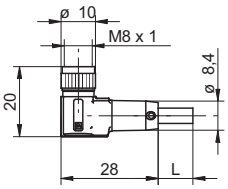


| order reference | |
|---|---|
| ESW 31AH0200G | Connector M8, 4 pin, angular, 2 m, shielded |
| ESW 31AH0500G | Connector M8, 4 pin, angular, 5 m, shielded |
| ESW 31AH1000G | Connector M8, 4 pin, angular, 10 m, shielded |

- Connector shielded, screen connected with cap nut
- 4 pin versions
- Cable coating PUR
- Halogen-free
- Suitable for flexible cable carriers
- UL listed, number E315836

## ESG 32 - Connector M8 straight

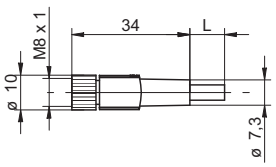


| order reference | |
|---|---|
| ESG 32AH0200 | Connector M8, 4 pin, straight, 2 m |
| ESG 32AH0500 | Connector M8, 4 pin, straight, 5 m |
| ESG 32AH1000 | Connector M8, 4 pin, straight, 10 m |

- Connector unshielded
- 4 pin versions
- Cable coating PUR
- Halogen-free
- Suitable for flexible cable carriers
- UL listed, number E315836

## ESG 32G - Connector M8 straight, shielded

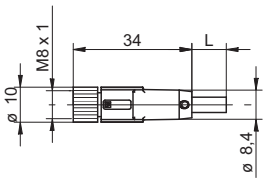


| order reference | |
|---|---|
| ESG 32AH0200G | Connector M8, 4 pin, straight, 2 m, shielded |
| ESG 32AH0500G | Connector M8, 4 pin, straight, 5 m, shielded |
| ESG 32AH1000G | Connector M8, 4 pin, straight, 10 m, shielded |

- Connector shielded, screen connected with cap nut
- 4 pin versions
- Cable coating PUR
- Halogen-free
- Suitable for flexible cable carriers
- UL listed, number E315836

## ESW 33 - Connector M12 angular

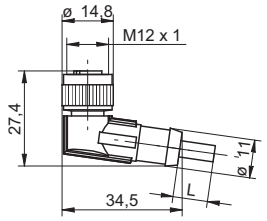


| order reference | |
|---|---|
| ESW 33AH0200 | Connector M12, 4 pin, angular, 2 m |
| ESW 33AH0500 | Connector M12, 4 pin, angular, 5 m |
| ESW 33AH1000 | Connector M12, 4 pin, angular, 10 m |
| ESW 33CH0200 | Connector M12, 5 pin, angular, 2 m |
| ESW 33CH0500 | Connector M12, 5 pin, angular, 5 m |
| ESW 33SH0200 | Connector M12, 3 pin, angular, 2 m |
| ESW 33SH0500 | Connector M12, 3 pin, angular, 5 m |
| ESW 33SH1000 | Connector M12, 3 pin, angular, 10 m |

- Connector unshielded
- 3, 4 and 5 pin versions
- Cable coating PUR
- Halogen-free
- Suitable for flexible cable carriers
- UL listed, number E315836

## ESW 33G - Connector M12 angular, shielded

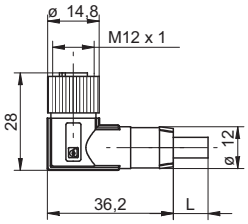


| order reference | |
|---|---|
| ESW 33AH0200G | Connector M12, 4 pin, angular, 2 m, shielded |
| ESW 33AH0500G | Connector M12, 4 pin, angular, 5 m, shielded |
| ESW 33AH1000G | Connector M12, 4 pin, angular, 10 m, shielded |
| ESW 33CH0500G | Connector M12, 5 pin, angular, 5 m, shielded |

- Connector shielded, screen connected with cap nut
- 4 and 5 pin versions
- Cable coating PUR
- Halogen-free
- Suitable for flexible cable carriers
- UL listed, number E315836

## ESG 34 - Connector M12 straight

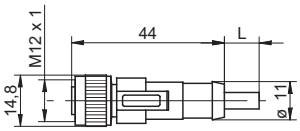


| order reference | |
|---|---|
| ESG 34AH0200 | Connector M12, 4 pin, straight, 2 m |
| ESG 34AH0500 | Connector M12, 4 pin, straight, 5 m |
| ESG 34AH1000 | Connector M12, 4 pin, straight, 10 m |
| ESG 34CH0200 | Connector M12, 5 pin, straight, 2 m |
| ESG 34CH0500 | Connector M12, 5 pin, straight, 5 m |
| ESG 34SH0200 | Connector M12, 3 pin, straight, 2 m |
| ESG 34SH0500 | Connector M12, 3 pin, straight, 5 m |
| ESG 34SH1000 | Connector M12, 3 pin, straight, 10 m |

- Connector unshielded
- 3, 4 and 5 pin versions
- Cable coating PUR
- Halogen-free
- Suitable for flexible cable carriers
- UL listed, number E315836

## ESG 34G - Connector M12 straight, shielded

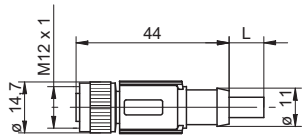


| order reference | |
|---|---|
| ESG 34AH0200G | Connector M12, 4 pin, straight, 2 m, shielded |
| ESG 34AH0500G | Connector M12, 4 pin, straight, 5 m, shielded |
| ESG 34AH1000G | Connector M12, 4 pin, straight, 10 m, shielded |
| ESG 34CH0200G | Connector M12, 5 pin, straight, 2 m, shielded |
| ESG 34CH0500G | Connector M12, 5 pin, straight, 5 m, shielded |
| ESG 34CH1000G | Connector M12, 5 pin, straight, 10 m, shielded |

- Connector shielded, screen connected with cap nut
- 4 and 5 pin versions
- Cable coating PUR
- Halogen-free
- Suitable for flexible cable carriers
- UL listed, number E315836

## M8 4 pin

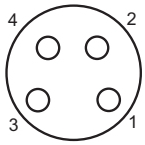


1 = BN
2 = WH
3 = BU
4 = BK

**ESG 32**
**ESG 32G**
**ESW 31**
**ESW 31G**

## M12 3 pin

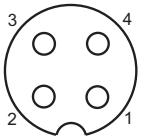


1 = BN
2 = n.c.
3 = BU
4 = WH

**ESG 34S**
**ESW 33S**

## M12 4 pin

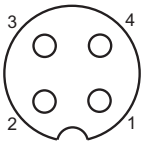


1 = BN
2 = WH
3 = BU
4 = BK

**ESG 34A**
**ESW 33A**

## M12 5 pin

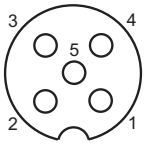


1 = BN
2 = WH
3 = BU
4 = BK
5 = GY

**ESG 34C**
**ESW 33C**

## Mounting bracket for sensors series 10

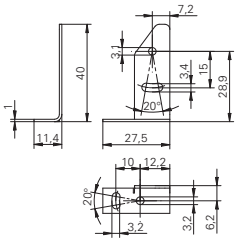


- Material: Steel

For use with UxDK 10, FxDK 10, OxDK 10

| order reference | |
|---|---|
| 10118798 | Mounting bracket series 10 |

## Mounting bracket for sensors series 10 (L design)

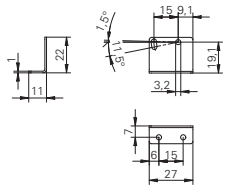


- Material: Steel

For use with UxDK 10, FxDK 10, OxDK 10

| order reference | |
|---|---|
| 10133792 | Mounting bracket series 10 L design |

## Mounting bracket for sensors series 10 (U design)

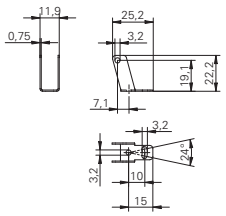


- Material: Steel

For use with UxDK 10, FxDK 10, OxDK 10 (only cabel versions)

| order reference | |
|---|---|
| 10114501 | Mounting bracket series 10 (U design) |

## Mounting panel for sensors series 10

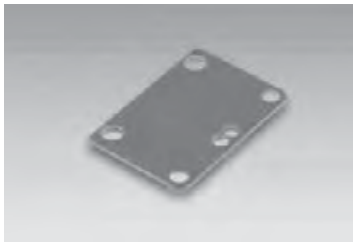

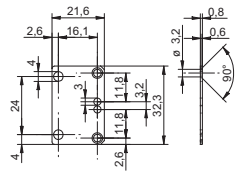


For use with UxDK 10, FxDK 10, OxDK 10

| order reference | |
|---|---|
| 10162083 | Mounting panel for sensors series 10 |

## Sonic beam deflector for ultrasonic sensors series 10

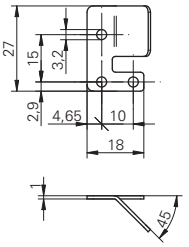


- Set of 2 included 1 x left, 1 x right

| order reference | |
|---|---|
| 10162376 | Sonic beam deflector for ultrasonic sensors series 10 |

## Sonic beam deflector for ultrasonic sensors series 18 round

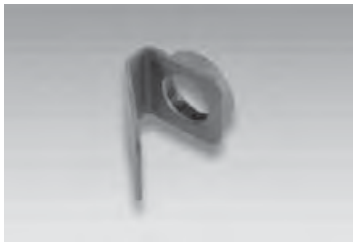

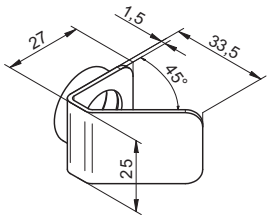


- Sonic beam deflector for ultrasonic sensors

For ultrasonic sensors series 18

| order reference | |
|---|---|
| 10164264 | Sonic beam deflector series 18 rectangular |

## Sonic beam deflector for ultrasonic sensors series 20

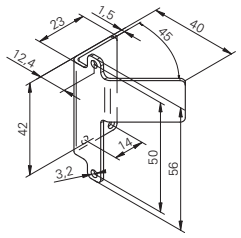


- Sonic beam deflector for ultrasonic sensors

For ultrasonic sensors series 20

| order reference | |
|---|---|
| 10153290 | Sonic beam deflector series 20 |

## Teach-in Adapter M12

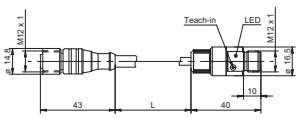


| order reference | |
|---|---|
| 10141584 | Teach-in Adapter M12 |

## Converter 3-point

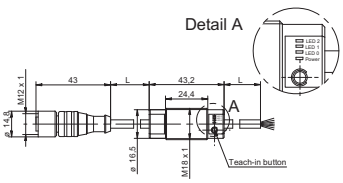


- Converter with three teachable outputs

For use with all distance measuring inductive and ultrasonic sensors

| order reference | |
|---|---|
| 10163979 | Converter 3-point (M12) |

## Test unit for sensors analog & digital

- Output via display (V or mA) or LED (PNP/NPN)
- Teach-in of sensors with integrated Teach- button
- Connection for plug in power supply (available as accessory)

Test- and configuration device for analog and digital PNP/NPN sensors with 18 VDC supply voltage

| order reference | |
|---|---|
| 11084376 | Test unit for sensors analog & digital |

## Test unit for sensors digital

- LED (red/green) for digital PNP/NPN signals
- Teach-in of sensors with integrated Teach- button
- Connection for plug in power supply (available as accessory)

Test- and configuration device for digital PNP/NPN sensors with 18 VDC supply voltage

| order reference | |
|---|---|
| 11084377 | Test unit for sensors digital |

## Power supply for sensor test unit

- Input 90-260 VAC
- Output 24 V/0,75 A
- Interchangeable plug-Type A, C, G and I

Protects the batteries of the sensor tester analog & digital for extended lifetime

| order reference | |
|---|---|
| 11087165 | Test unit for sensors |

## Sensofix-Mounting kit for sensors series 12 round

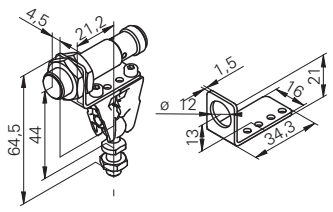


- Clamps made of stainless steel
- Ball pivots made of galvanized steel
- Mounting panel made of stainless steel

For use with all sensors in M12 housing

| order reference | |
|---|---|
| 10151720 | Sensofix series 12 round |

## Sensofix-Mounting kit for sensors series 18 round

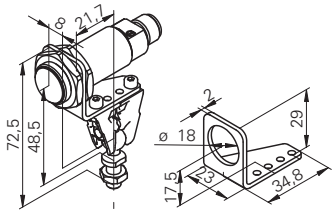


- Clamps made of stainless steel
- Ball pivots made of galvanized steel
- Mounting panel made of stainless steel

For use with all sensors in M18 housing

| order reference | |
|---|---|
| 10151658 | Sensofix series 18 |

## Sensofix-Mounting kit for sensors series 10/20

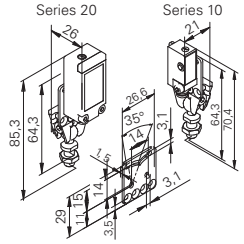


- Clamps made of stainless steel
- Ball pivots made of galvanized steel
- Mounting panel made of stainless steel

For use with photoelectric and ultrasonic sensors series 10, series 20

| order reference | |
|---|---|
| 10150326 | Sensofix series 10 / series 20 |

## Sensofix-Mounting kit for sensors series 30

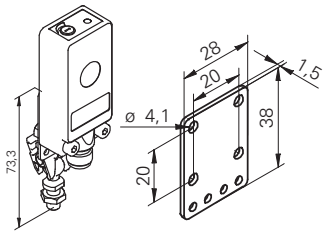


- Clamps made of stainless steel
- Ball pivots made of galvanized steel
- Mounting panel made of stainless steel

For use with inductive and ultrasonic sensors series 30

| order reference | |
|---|---|
| 10152386 | Sensofix series 30 |

| order reference | page |
|---|---|
| **E** | |
| ESG 32AH0200 | 116 |
| ESG 32AH0200G | 117 |
| ESG 32AH0500 | 116 |
| ESG 32AH0500G | 117 |
| ESG 32AH1000 | 116 |
| ESG 32AH1000G | 117 |
| ESG 34AH0200 | 118 |
| ESG 34AH0200G | 118 |
| ESG 34AH0500 | 118 |
| ESG 34AH0500G | 118 |
| ESG 34AH1000 | 118 |
| ESG 34AH1000G | 118 |
| ESG 34CH0200 | 118 |
| ESG 34CH0200G | 118 |
| ESG 34CH0500 | 118 |
| ESG 34CH0500G | 118 |
| ESG 34CH1000G | 118 |
| ESG 34SH0200 | 118 |
| ESG 34SH0500 | 118 |
| ESG 34SH1000 | 118 |
| ESW 31AH0200 | 116 |
| ESW 31AH0200G | 116 |
| ESW 31AH0500 | 116 |
| ESW 31AH0500G | 116 |
| ESW 31AH1000 | 116 |
| ESW 31AH1000G | 116 |
| ESW 33AH0200 | 117 |
| ESW 33AH0200G | 117 |
| ESW 33AH0500 | 117 |
| ESW 33AH0500G | 117 |
| ESW 33AH1000 | 117 |
| ESW 33AH1000G | 117 |
| ESW 33CH0200 | 117 |
| ESW 33CH0500 | 117 |
| ESW 33CH0500G | 117 |
| ESW 33SH0200 | 117 |
| ESW 33SH0500 | 117 |
| ESW 33SH1000 | 117 |
| **U** | |
| UEDK 20P6103/S35A | 112 |
| UEDK 30N5103/S14 | 113 |
| UEDK 30N5103 | 113 |
| UEDK 30P5103/S14 | 113 |
| UEDK 30P5103 | 113 |
| UNAM 12I9912/S14 | 46 |
| UNAM 12I9914/S14 | 45 |
| UNAM 12N1912/S14 | 73 |
| UNAM 12N1914/S14 | 72 |
| UNAM 12N1914/S14D | 70 |
| UNAM 12N3912/S14 | 73 |
| UNAM 12N3914/S14 | 72 |
| UNAM 12N8910/S14O | 71 |
| UNAM 12N8910/S14OD | 69 |
| UNAM 12P1912/S14 | 73 |
| UNAM 12P1914/S14 | 72 |
| UNAM 12P1914/S14D | 70 |
| UNAM 12P3912/S14 | 73 |
| UNAM 12P3914/S14 | 72 |
| UNAM 12P8910/S14O | 71 |
| UNAM 12P8910/S14OD | 69 |
| UNAM 12U9912/S14 | 46 |
| UNAM 12U9914/S14 | 45 |
| UNAM 12U9914/S14D | 44 |
| UNAM 18I6903/S14 | 47 |
| UNAM 18N1703 | 74 |
| UNAM 18N3703 | 74 |

| order reference | page |
|---|---|
| UNAM 18N6903/S14 | 75 |
| UNAM 18P1703 | 74 |
| UNAM 18P3703 | 74 |
| UNAM 18P6903/S14 | 75 |
| UNAM 18P7903/S14 | 75 |
| UNAM 18U6903/S14 | 47 |
| UNAM 30I6103/S14 | 50 |
| UNAM 30I6103 | 50 |
| UNAM 30I6803/S14 | 50 |
| UNAM 30N1104/S14 | 78 |
| UNAM 30N1104 | 78 |
| UNAM 30N3104/S14 | 78 |
| UNAM 30N3104 | 78 |
| UNAM 30P1104/S14 | 78 |
| UNAM 30P1104 | 78 |
| UNAM 30P3104/S14 | 78 |
| UNAM 30P3104 | 78 |
| UNAM 30U6103/S14 | 50 |
| UNAM 30U6103 | 50 |
| UNAM 30U9103/S14 | 50 |
| UNAM 30U9103 | 50 |
| UNAM 50I6121/S14 | 51 |
| UNAM 50I6121 | 51 |
| UNAM 50N1721/S14 | 79 |
| UNAM 50N1721 | 79 |
| UNAM 50N3721/S14 | 79 |
| UNAM 50N3721 | 79 |
| UNAM 50P1721/S14 | 79 |
| UNAM 50P1721 | 79 |
| UNAM 50P3721/S14 | 79 |
| UNAM 50P3721 | 79 |
| UNAM 50U6121/S14 | 51 |
| UNAM 50U6121 | 51 |
| UNAR 18I6903/S14G | 49 |
| UNAR 18I6912/S14G | 48 |
| UNAR 18N6903/S14G | 77 |
| UNAR 18N6912/S14G | 76 |
| UNAR 18N7903/S14G | 77 |
| UNAR 18N7912/S14G | 76 |
| UNAR 18P6903/S14G | 77 |
| UNAR 18P6912/S14G | 76 |
| UNAR 18P7903/S14G | 77 |
| UNAR 18P7912/S14G | 76 |
| UNAR 18U6903/S14G | 49 |
| UNAR 18U6912/S14G | 48 |
| UNCK 09G8914/D1 | 59 |
| UNCK 09G8914/IO | 27 |
| UNCK 09G8914/KS35A/IO | 27 |
| UNCK 09G8914/KS35A | 58 |
| UNCK 09G8914/KS35AD1 | 59 |
| UNCK 09G8914 | 58 |
| UNCK 09T9114/D1 | 30 |
| UNCK 09T9114/KS35A | 28 |
| UNCK 09T9114/KS35AD1 | 30 |
| UNCK 09T9114 | 28 |
| UNCK 09U6914/D1 | 29 |
| UNCK 09U6914/KS35A | 26 |
| UNCK 09U6914/KS35AD1 | 29 |
| UNCK 09U6914 | 26 |
| UNDK 09G8914/D1 | 61 |
| UNDK 09G8914/IO | 32 |
| UNDK 09G8914/KS35A/IO | 32 |
| UNDK 09G8914/KS35A | 60 |
| UNDK 09G8914/KS35AD1 | 61 |
| UNDK 09G8914 | 60 |
| UNDK 09T9114/D1 | 35 |
| UNDK 09T9114/KS35A | 33 |
| UNDK 09T9114/KS35AD1 | 35 |
| UNDK 09T9114 | 33 |

| order reference | page |
|---|---|
| UNDK 09U6914/D1 | 34 |
| UNDK 09U6914/KS35A | 31 |
| UNDK 09U6914/KS35AD1 | 34 |
| UNDK 09U6914 | 31 |
| UNDK 10N8914/KS35A | 62 |
| UNDK 10N8914/S35A | 62 |
| UNDK 10N8914 | 62 |
| UNDK 10P8914/KS35A | 62 |
| UNDK 10P8914/S35A | 62 |
| UNDK 10P8914 | 62 |
| UNDK 10U6914/KS35A | 36 |
| UNDK 10U6914/S35A | 36 |
| UNDK 10U6914 | 36 |
| UNDK 20I6903/S35A | 39 |
| UNDK 20I6912/S35A | 38 |
| UNDK 20I6914/S35A | 37 |
| UNDK 20N6903/S35A | 65 |
| UNDK 20N6912/S35A | 64 |
| UNDK 20N6914/S35A | 63 |
| UNDK 20N7903/S35A | 65 |
| UNDK 20N7912/S35A | 64 |
| UNDK 20N7914/S35A | 63 |
| UNDK 20P6903/S35A | 65 |
| UNDK 20P6912/S35A | 64 |
| UNDK 20P6914/S35A | 63 |
| UNDK 20P7803/S35A | 65 |
| UNDK 20P7912/S35A | 64 |
| UNDK 20P7914/S35A | 63 |
| UNDK 20U6903/S35A | 39 |
| UNDK 20U6912/S35A | 38 |
| UNDK 20U6914/S35A | 37 |
| UNDK 30I6103/S14 | 42 |
| UNDK 30I6103 | 42 |
| UNDK 30I6104/S14 | 43 |
| UNDK 30I6112/S14 | 41 |
| UNDK 30I6112 | 41 |
| UNDK 30I6113/S14 | 40 |
| UNDK 30I6113 | 40 |
| UNDK 30N1703/S14 | 68 |
| UNDK 30N1703 | 68 |
| UNDK 30N1712/S14 | 67 |
| UNDK 30N1712 | 67 |
| UNDK 30N1713/S14 | 66 |
| UNDK 30N1713 | 66 |
| UNDK 30N3703/S14 | 68 |
| UNDK 30N3703 | 68 |
| UNDK 30N3712/S14 | 67 |
| UNDK 30N3712 | 67 |
| UNDK 30N3713/S14 | 66 |
| UNDK 30N3713 | 66 |
| UNDK 30P1703/S14 | 68 |
| UNDK 30P1703 | 68 |
| UNDK 30P1712/S14 | 67 |
| UNDK 30P1712 | 67 |
| UNDK 30P1713/S14 | 66 |
| UNDK 30P1713 | 66 |
| UNDK 30P3703/S14 | 68 |
| UNDK 30P3703 | 68 |
| UNDK 30P3712/S14 | 67 |
| UNDK 30P3712 | 67 |
| UNDK 30P3713/S14 | 66 |
| UNDK 30P3713 | 66 |
| UNDK 30U6103/S14 | 42 |
| UNDK 30U6103 | 42 |
| UNDK 30U6104/S14 | 43 |
| UNDK 30U6104 | 43 |
| UNDK 30U6112/S14 | 41 |
| UNDK 30U6112 | 41 |
| UNDK 30U6113/S14 | 40 |

| order reference | page |
|---|---|
| UNDK 30U6113 | 40 |
| UNDK 30U9103/S14 | 42 |
| UNDK 30U9103 | 42 |
| UNDK 30U9112/S14 | 41 |
| UNDK 30U9112 | 41 |
| UNDK 30U9113/S14 | 40 |
| UNDK 30U9113 | 40 |
| URAM 12N8910/S14O | 105 |
| URAM 12N8910/S14OD | 104 |
| URAM 12P8910/S14O | 105 |
| URAM 12P8910/S14OD | 104 |
| URAM 50N1721/S14 | 107 |
| URAM 50N1721 | 107 |
| URAM 50P6121/S14 | 107 |
| URAM 50P6121 | 107 |
| URAM 50P7121/S14 | 107 |
| URAM 50P7121 | 107 |
| URAR 18N6912/S14G | 106 |
| URAR 18N7912/S14G | 106 |
| URAR 18P6912/S14G | 106 |
| URAR 18P7912/S14G | 106 |
| URCK 09G8914/KS35A | 96 |
| URCK 09G8914 | 96 |
| URDK 09G8914/KS35A | 97 |
| URDK 09G8914 | 97 |
| URDK 10N8914/KS35A | 98 |
| URDK 10N8914/S35A | 98 |
| URDK 10N8914 | 98 |
| URDK 10P8914/KS35A | 98 |
| URDK 10P8914/S35A | 98 |
| URDK 10P8914 | 98 |
| URDK 20N6903/S35A | 101 |
| URDK 20N6912/S35A | 100 |
| URDK 20N6914/S35A | 99 |
| URDK 20N7903/S35A | 101 |
| URDK 20N7912/S35A | 100 |
| URDK 20N7914/S35A | 99 |
| URDK 20P6903/S35A | 101 |
| URDK 20P6912/S35A | 100 |
| URDK 20P6914/S35A | 99 |
| URDK 20P7903/S35A | 101 |
| URDK 20P7912/S35A | 100 |
| URDK 20P7914/S35A | 99 |
| URDK 30N1703/S14 | 102 |
| URDK 30N3703/S14 | 102 |
| URDK 30P1703/S14 | 102 |
| URDK 30P3703/S14 | 102 |
| URDK 30P6104/S14 | 103 |
| URDK 30P7104/S14 | 103 |
| USDK 20D9003/S35A | 112 |
| USDK 30D9003/S14 | 113 |
| USDK 30D9003 | 113 |
| UZAM 30N6103/S14 | 88 |
| UZAM 30P6103/S14 | 88 |
| UZAM 30P6103 | 88 |
| UZAM 30P6803/S14C | 88 |
| UZAM 50N6121/S14 | 89 |
| UZAM 50N6121 | 89 |
| UZAM 50P6121/S14 | 89 |
| UZAM 50P6121 | 89 |
| UZDK 30N6112/S14 | 85 |
| UZDK 30P6103/S14 | 86 |
| UZDK 30P6103 | 86 |
| UZDK 30P6104/S14 | 87 |
| UZDK 30P6104 | 87 |
| UZDK 30P6112/S14 | 85 |
| UZDK 30P6113/S14 | 84 |
| UZDK 30P6113 | 84 |

| order reference | page |
|---|---|

| order reference | page |
|---|---|

# Worldwide presence.

We strive to be close to our customers all around the world. We listen to them, and then after understanding their needs, we provide the best solution. Worldwide customer service for us starts with on-the-spot personal discussions and qualified consultation. Our application engineers speak your language and strive from the start, through an interactive problem analysis, to offer comprehensive and user-compatible solutions. The worldwide Baumer sales organizations guarantee a high level of readiness to deliver.

**Africa**
Algeria
Cameroon
Côte d'Ivoire
Egypt
Morocco
Reunion
South Africa

**America**
Brazil
Canada
Colombia
Mexico
United States
Venezuela

**Asia**
Bahrain
China
India
Indonesia
Israel
Japan
Kuwait
Malaysia
Oman
Philippines
Qatar
Saudi Arabia
Singapore
South Korea
Taiwan
Thailand
UAE

**Europe**
Austria
Belgium
Bulgaria
Croatia
Czech Republic
Denmark
Finland
France
Germany
Greece
Hungary
Italy
Malta
Martinique
Netherlands
Norway
Poland
Portugal
Romania
Russia
Serbia
Slovakia
Slovenia
Spain
Sweden
Switzerland
Turkey
United Kingdom

**Oceania**
Australia
New Zealand

For more information about our worldwide locations go to:
**www.baumer.com/worldwide**

# Our entire portfolio

Baumer has the perfect solution for every application.

**Presence detection**
- Inductive sensors
- Photoelectric sensors
- Ultrasonic sensors
- Capacitive sensors
- Magnetic sensors
- Precision mechanical switches

**Distance measurement**
- Inductive sensors
- Photoelectric sensors
- Ultrasonic sensors
- Linear encoders without bearings
- Cable-pull encoders

**Angle measurement / Rotary encoders**
- Absolute encoders
- Incremental encoders
- HeavyDuty encoders
- Bearingless encoders
- Format alignment
- Inclination sensors

**Identification / Image processing**
- Industrial Cameras
- Vision Sensors

**Process instrumentation**
- Level measurement
- Temperature measurement
- Pressure measurement
- Conductivity measurement
- Force/strain sensors
- Counters and process displays

Baumer
Passion for Sensors

**Baumer Group**
International Sales
P.O. Box · Hummelstrasse 17 · CH-8501 Frauenfeld
Phone +41 52 728 1122 · Fax +41 52 728 1144
sales@baumer.com · www.baumer.com

Represented by:

Technical modifications and errors reserved.
05/13 No. 11106734