Instrum

LIVE DEMATEABLE CONNECTOR TERMINATION / HOOK UP PROCEDURE

(AI364 Rev 6 – 03Apr14)

Hawke International
UK Office,
Oxford Street West,
Ashton-under-Lyne,
Lancashire.
OL7 0NA. UK

Sales: +44 (0) 161 830 6698

Connection Solutions
www.ehawke.com

HAWKE International
HUBBELL

IMPORTANT NOTE

1. Hawke International does not recommend the use of their InstrumEx Connectors in applications where rigid PVC / SWA / PVC power cabling (typically to BS 6346 standards) is used in portable / semi-portable applications.
2. Hawke International recommends that barrier type glands are fitted to flexible power and loose filled control cabling entering the connectors to maintain the Exd protection concept and to reduce the potential for core movements within the cable being transferred to the connector's internal components.
3. Hawke Ex Connector products are designed to be used in multi-voltage applications in circuits: 4 way up to 250V AC, 4 way up to 60V DC and 8 way up to 60V AC/DC. It is possible that on certain installations, there may be a mix of applications utilising different voltages on the Connector products. In these instances, the installer / circuit designer must ensure that the plugs and sockets, or their associated cabling, is clearly marked with the correct circuit voltage and current rating to ensure that the equipment being supplied is matched correctly with the supply voltage. The variable insert positions which are a feature of the Connectors may also be used to provide additional means of safety in these applications.

CP / CR PROCEDURE

1) Unscrew the middle nut and back nut from the connector body and remove the armour clamping ring, spigot and insert. If you have purchased a connector with the optional backnut clamp and / or flange, slide these down the cable now (clamp first).

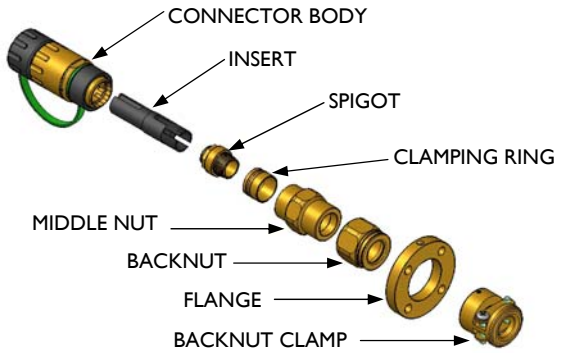

2) Remove the two seal assembly's from the box and choose the required seal to suit the diameter of the cable outer jacket.

Os SIZE SEAL.
RANGE = 5.5 – 12mm

O SIZE SEAL
RANGE = 9.5 – 16mm

3) Insert the seal into the back nut, ensuring that the flange on the seal goes past the thread as shown.

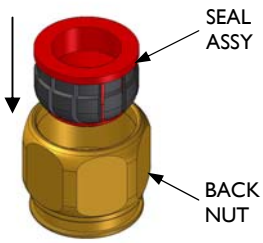

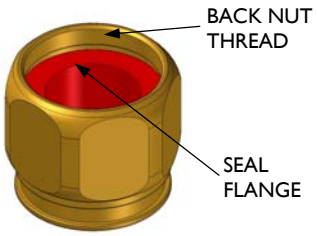

4) Screw the back nut onto the middle nut. Do not compress the seal at this stage.

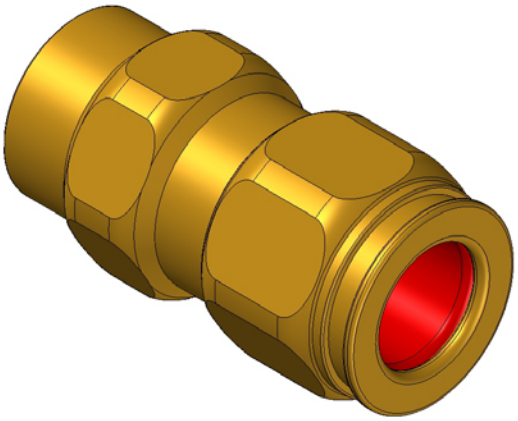

5) Slide the middle nut, backnut and armour clamping ring over the cable ensuring that the clamping ring is pointing in the required direction for the size of armour / braid. The alternative ring is supplied in the box.

RING PART NO.	ARMOUR / BRAID THICKNESS	
	ORIENTATION 1	ORIENTATION 2
Standard	0.8 – 1.25	0.0 – 0.8

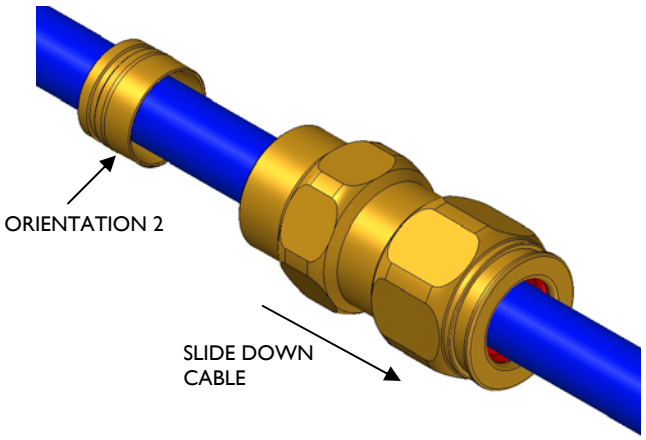

6) Strip back the outer jacket and armour (if present) as shown below.

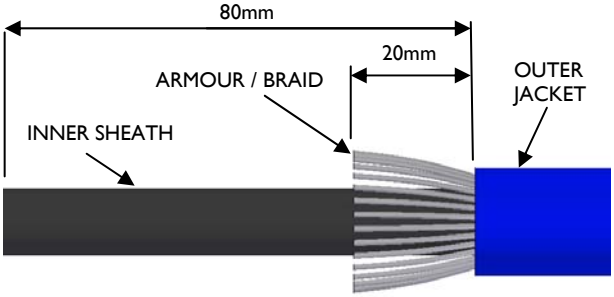

7) Strip back the inner sheath level with the armour to expose the insulated conductors as shown below. If unarmoured, strip back to the outer jacket.

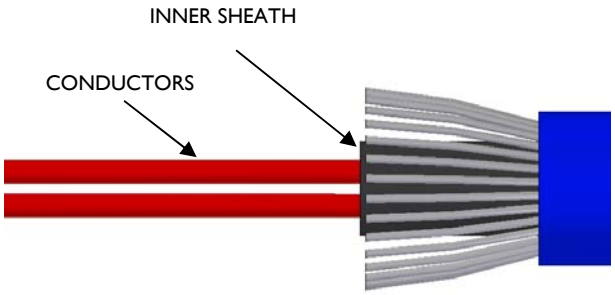

ARMOURED / BRAIDED CABLE

8) Push the inner sheath of the cable through the spigot. Spread the armour / braid over the spigot until the end of the armour / braid is up against the shoulder of the spigot. Position the armour clamping ring onto the armour / braid.

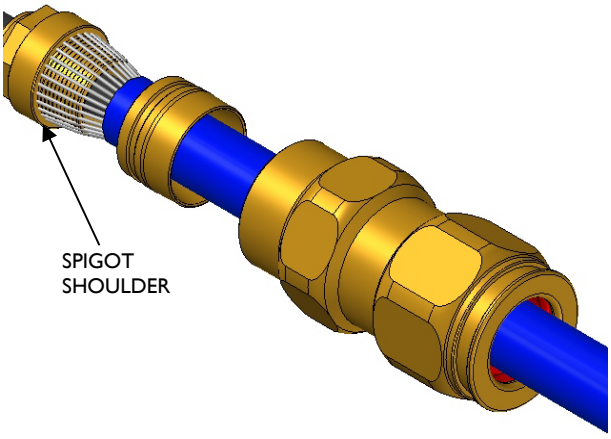

9) Place the connector body over the spigot engaging the octagonal portion of the spigot. Move the middle nut up to meet the connector body. Place a 27 A/F spanner on the flats of the connector body and hold it in position. Hand tighten the middle nut to the connector body, then turn a further ½ to ¾ turn with a 27 A/F spanner.

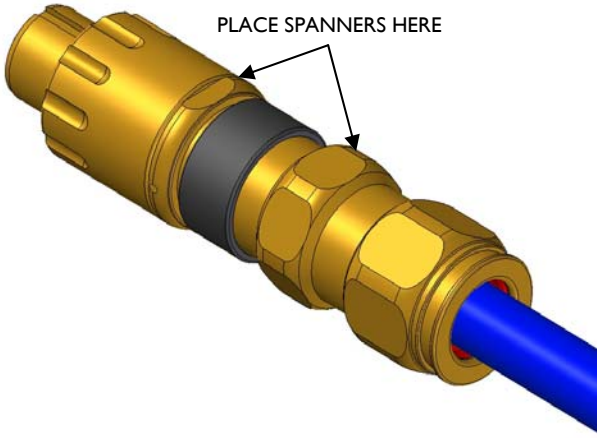

10) Unscrew the middle nut and visually inspect the armour has been successfully clamped between the armour spigot and the clamping ring.

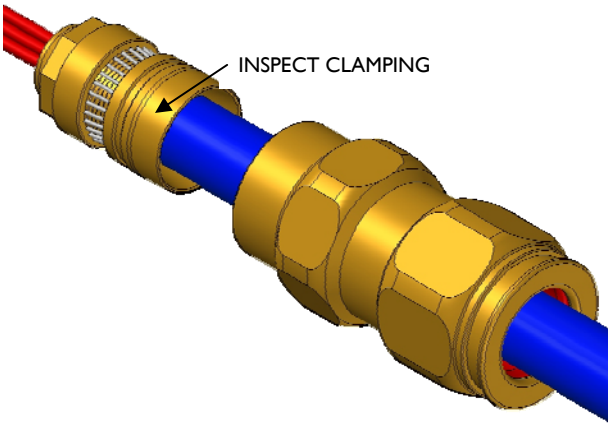

UNARMOURED CABLE

(If earth is to be terminated to connector shell. Otherwise proceed to step 15)

11) Strip back the earth conductor as shown below. If the earth is being carried through a contact as well as being connected to the shell, see fig b.

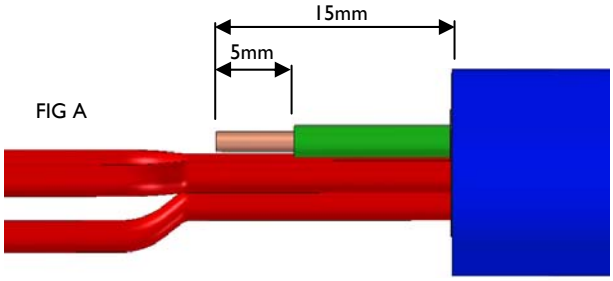

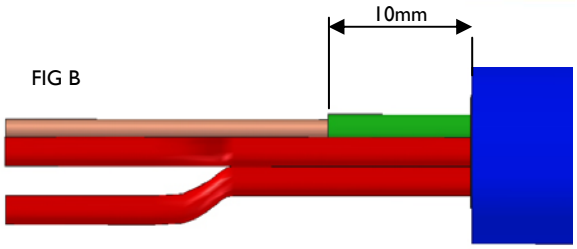

12) Crimp the flat blade earth crimp onto the earth conductor as shown below. Ensure the blade of the crimp is outermost as shown and that the crimp is pushed all the way up to the insulation of the earth conductor.

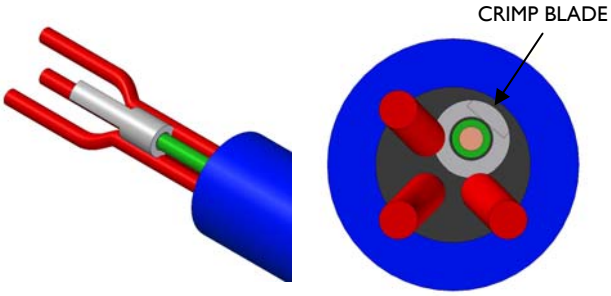

13) Push the conductors through the spigot and place the blade of the crimp on the taper of the spigot.

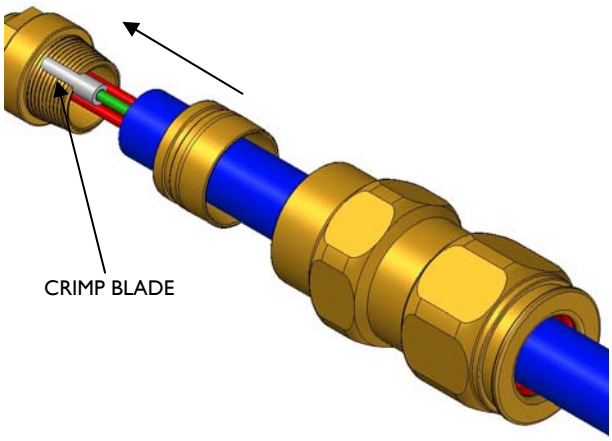

14) Push the armour clamp (orientation 2 – see step 5) onto the blade of the crimp and lock into position by following steps 9 and 10 of the armoured / braided cable procedure.

15) Strip back the conductors as shown below.

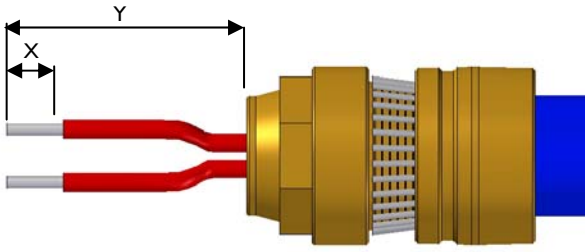

CONTACT	CONTACT SIZE	X	Y
8 Core	0.14 - 0.37mm²	5mm	23 – 28mm
4 Core	0.5mm²	10mm	28 – 33mm
0.5mm² – 1.0mm²	1.0mm²	5mm	23 – 28mm
4 Core	1.5mm²	10mm	28 – 33mm
0.5mm² – 2.5mm²	2.5mm²	5mm	23 – 28mm

16) Remove the contacts from the contact retainers. Crimp the contacts onto the conductors using the Hawke crimp tool only (part number 901849). Ensure that the insulation of the conductor is up against the shoulder of the contact. When terminating 0.5mm² or 1.5mm² wire, ensure the conductor is pushed all the way into the smaller hole of the contact and that the contact is square in the crimp tool.

CAUTION: EXCESSIVE FORCE MAY BEND THE CONTACTS

Alternatively, conductors may be soldered into the contacts. Ensure that the cable installation is the same on the mating half. Hawke recommends that wiring details are placed on the cable outer jacket near to the connector.

4 CORE 0.5mm² – 1.0mm²

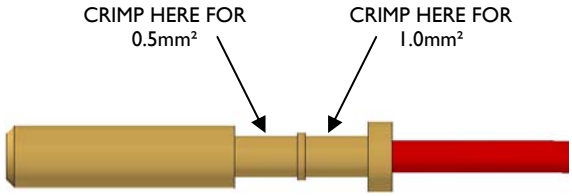

4 CORE 1.5mm² – 2.5mm²

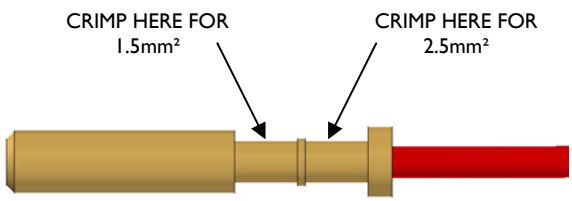

17) Splay out the contacts and fit them through the slots in the rear contact retainer, ensuring they line up with the relevant numbered hole on the front contact retainer (ensure keys are aligned - see step 18). Unused contacts should be omitted if not required to ease assembly.

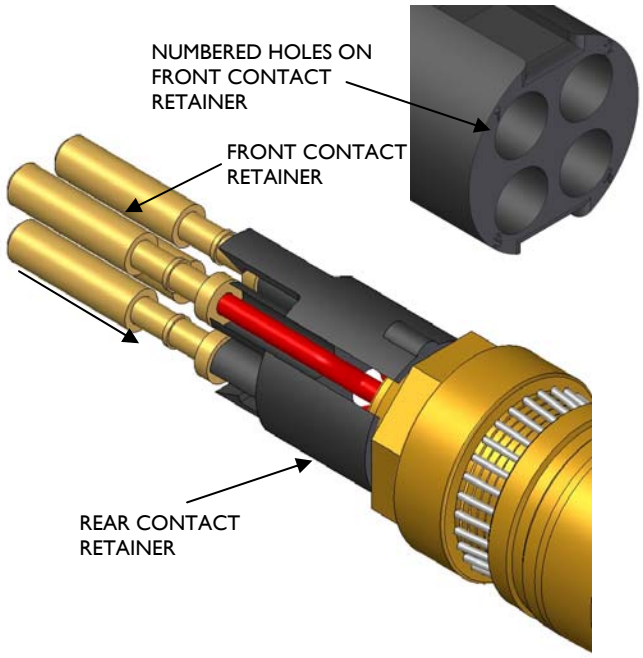

18) Slide the front contact retainer over the contacts and snap into place with the rear contact retainer. Push the clips of the rear contact retainer firmly down to ensure they are not protruding (will only fit in the correct orientation).

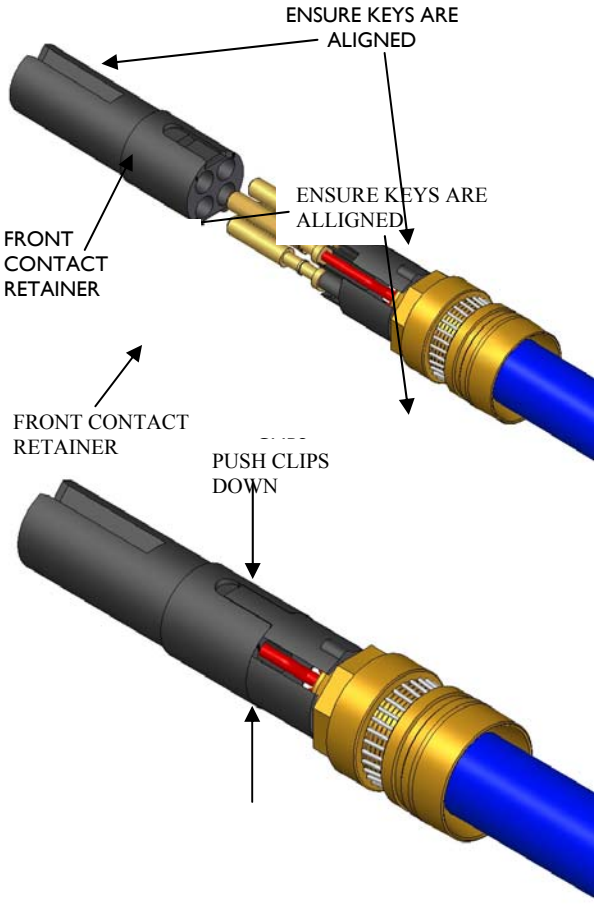

19) Slide the insert into the connector body, aligning the half round key on the rear contact retainer with the required half round keyway in the connector body. (The colour coded or numbered keying position is shown on the front of the connector body. No colour coding or numbering for default 12 o'clock position – see picture inset). It should be noted that colour coded and numbered connector bodies are mutually interchangeable. Push the octagonal portion of the spigot into the connector body.

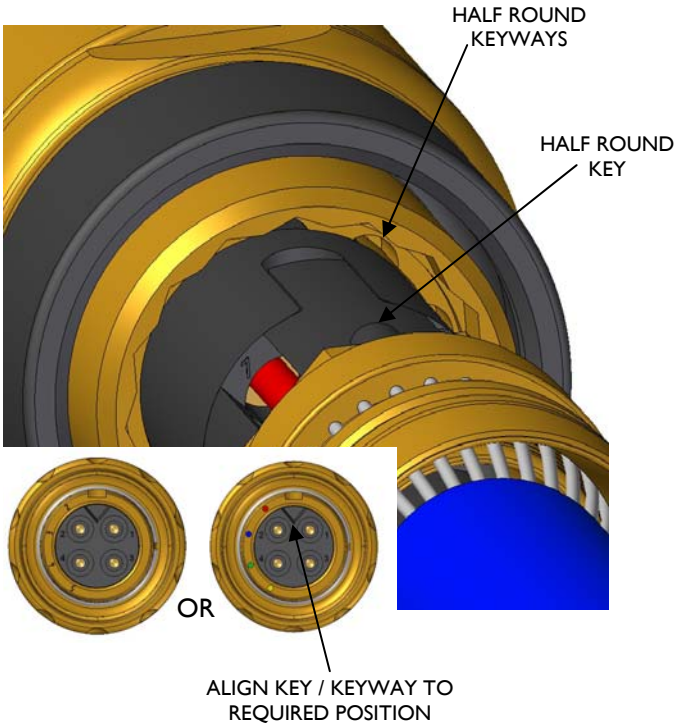

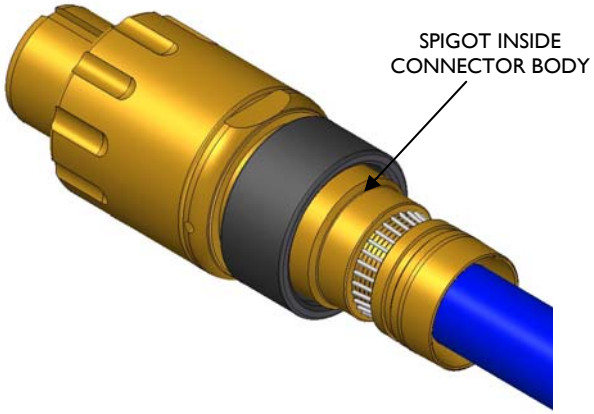

20) Slide the middle nut over the clamp / spigot and hand tighten onto the connector body, then further tighten ½ to ¾ of a turn with a 27 A/F spanner while holding the front shell with a 27 A/F spanner

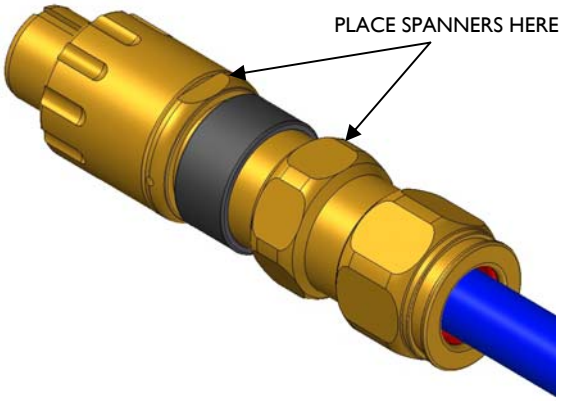

21) Hand tighten the backnut onto the middle nut. Further tighten 1 to 1 ½ turns with a 27 A/F spanner while holding the middle nut with a spanner.

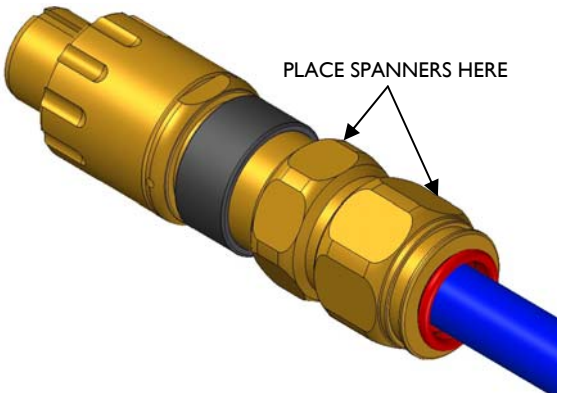

22) If the optional mounting flange is required, slide the flange over the backnut and position on the middle nut. Align the grub screw with one of the flats and tighten. If the flange is being used on a CR connector, it may also be placed on the connector body as shown over.

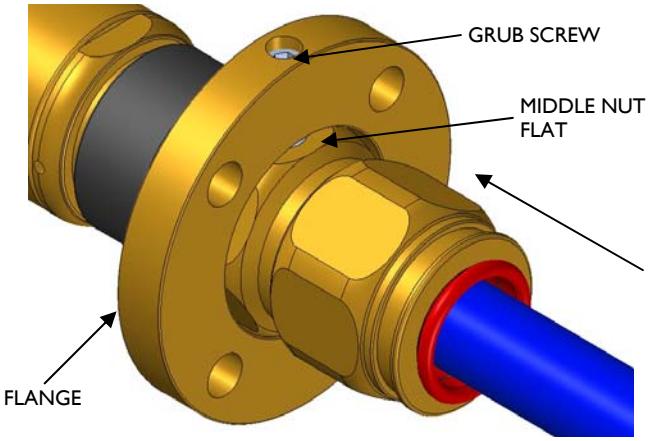

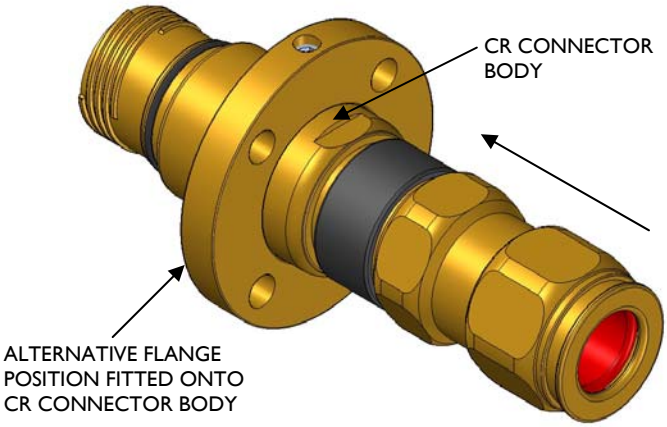

23) If the optional cable clamp has been purchased, tighten the screws on the clamping bars equally until the clamping bars touch the cable. Tighten each screw a further 2-4 turns or until adequately clamped. **DO NOT OVERTIGHTEN AS THIS COULD DAMAGE THE CABLE**.
If the cable clamp is being used with unarmoured cable, the connector should be earthed via the crimp with a 4mm² conductor.

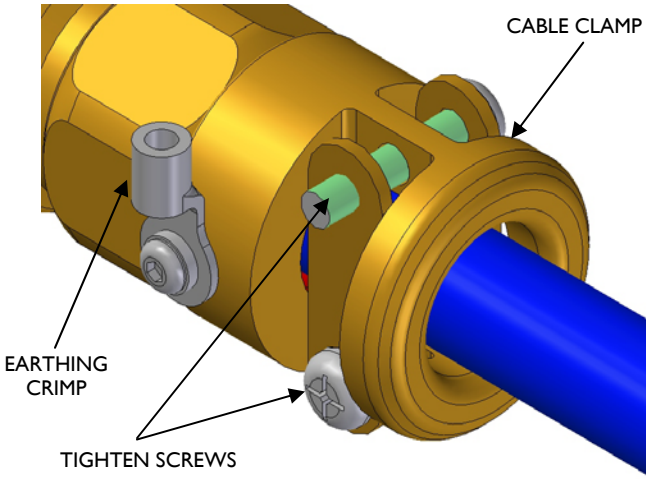

24) Screw the cap back onto the connector. **Stick the corresponding round colour coded / numbered sticker onto label in the circular space provided. (white = 12 o'clock / Position 1)**

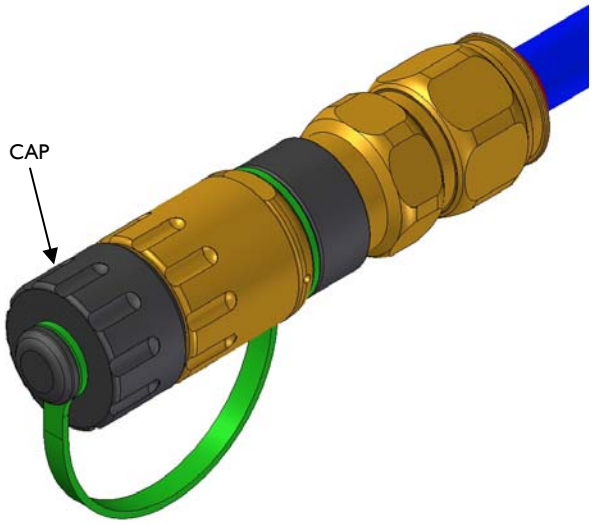

25) The connector is now ready for hook up. Please refer to the hook up procedure.

BR PROCEDURE

1) The BR connector is supplied ready terminated with tails. Simply fit into suitable junction box / equipment as required. To maintain the IP rating of the equipment, a sealing washer should be used (available separately) as shown below.

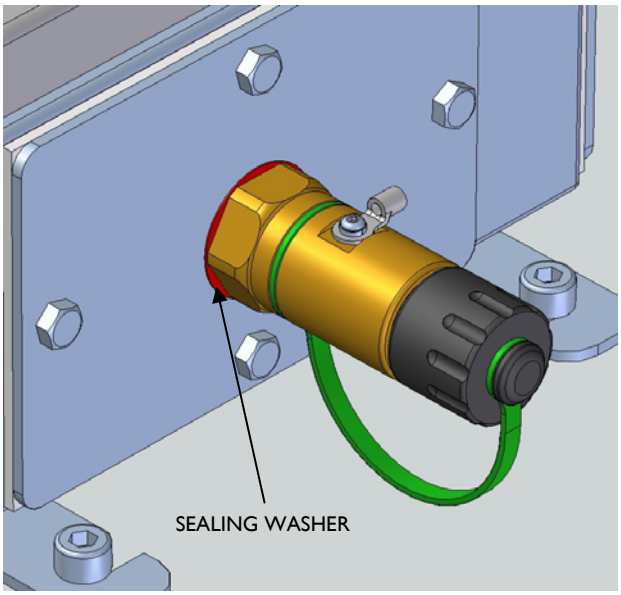

2) Terminate the conductors and earth wire inside the junction box / equipment.

3) The connector may also be earthed externally via the crimp with a 4mm² conductor if required.

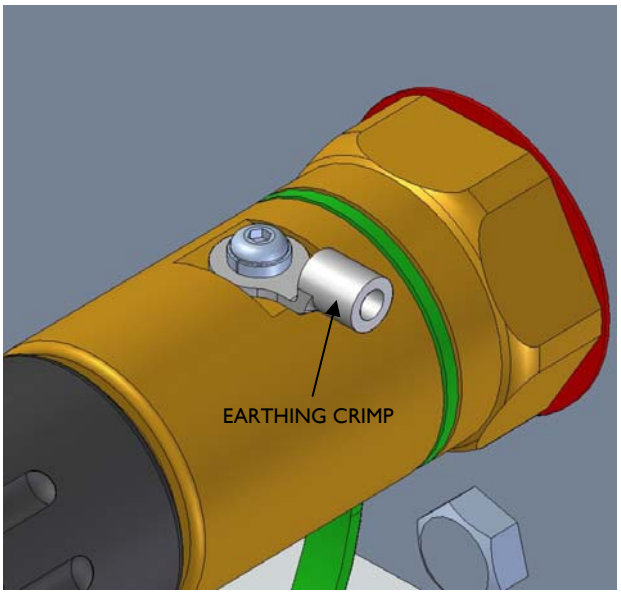

4) The connector is now ready for hook up. Please refer to the hook up procedure.

HOOK UP PROCEDURE

WARNING:
Only the socket insert is allowed to remain energised while de-mated. If being used with bi-directional signals, isolate elswhere before connecting / disconnecting.

Before commencing hook up, a visual inspection should be carried out on the cable / connector assembly. The assembly should be checked to ensure that all of the assembly components are tight. If the assembly components have loosened during transportation / cable installation, they should be retightened in accordance with the relevant assembly instruction sheets without twisting the cable in the connector assembly.

1) Remove connector caps.

2) Ensure the connectors are both set to the same keying position colour or numbered (no colour or number for default 12 o'clock position on BR/CR) and are of the same insert type.

   It should be noted that colour coded and numbered connector bodies are mutually interchangeable.

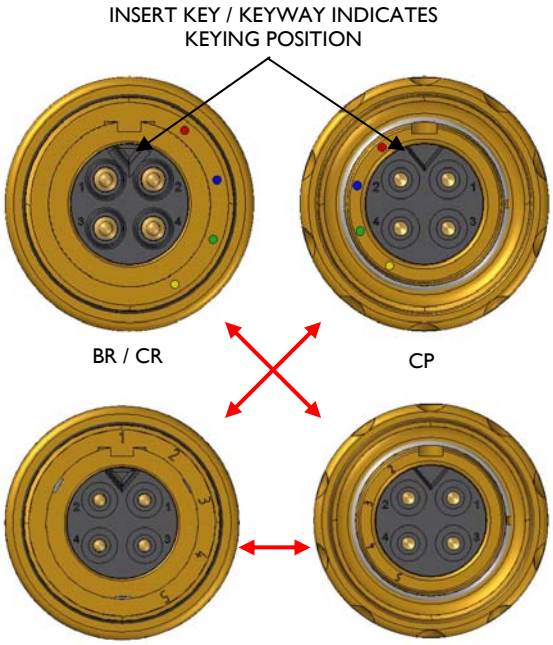

3) Engage the CP connector with the BR / CR connector and align the keyway on the CP connector to the key on the BR / CR connector.

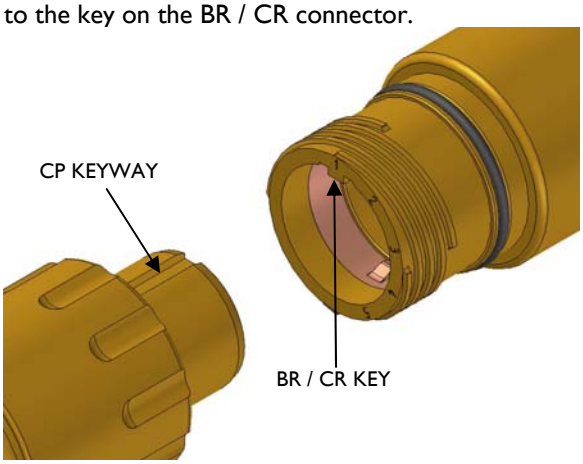

4) Engage the two connectors by screwing the engaging nut clockwise without interruption onto the BR/CR shell. If the threads will not engage, the connectors are set to different keying positions.

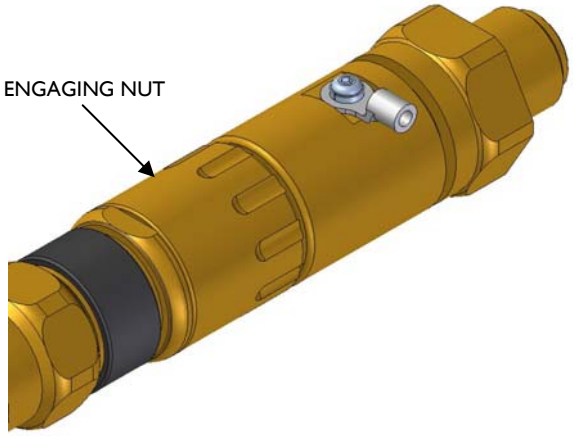

5) If anti-vibration protection is required, tighten the grub screw on the CP shell.

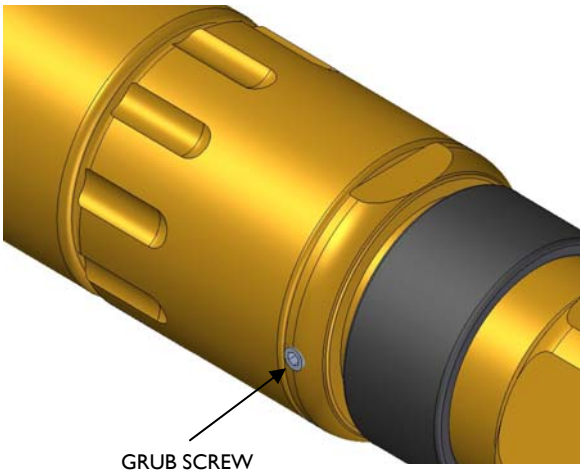

6) To disconnect, slacken the tightened grub screw, turn the engaging nut anti-clockwise and remove the connector. Fit the caps.

Technical Specification

Certification: Ex II2GD Exde IIC Gb, Extb IIIC Db T85

Tamb: -40°C to +60°C

ATEX Cert No: Baseefa06ATEX0061X
IECEx Cert No: IECEx BAS06.0018X

IP Rating: IP66 / 67 (IP68 on request)
Note: Caps to be fitted to maintain IP ratings when the connector halves are separated.

Deluge Rating:	DTS01	
Outer Seal Range:	5.5 to 12mm and 9.5 to 16mm	
Armour/Braid Sizes:	0 to 1.25mm	
Keying Positions:	CP / CR – 5 flexible	BR – 5 factory set
Conductor Sizes:	4-Way 0.5 to 2.5mm²	8-Way 0.14 to 0.37mm²
Ratings: Voltage AC	4-Way 250V	8-Way 60V
Current AC		
EN 60947-4-3	10A (AC21)	1A (AC21)
EN 60947-4-1	10A (AC1)	1A (AC1)
EN 60947-4-1	1A (AC3)	0.1A (AC3)
Frequency	50 / 60 Hz	50 / 60 Hz
Power Factor	0.9	0.9
Voltage DC	60V	60V
Current DC		
EN 60947-3	2.5A (DC21)	0.5A (DC21)
EN 60947-4-1	2.5A (DC1)	0.5A (DC1)
EN 60947-4-1	0.5A (DC3)	0.1A (DC3)

Fuse Rating:

4-Way	10 amp without thermal protection 20A gL with thermal protection
8-Way	1 amp max with / without thermal protection

Maximum number of make and break operations (EN 61984)

	On-Load	Off-Load
4-Way	150	500
8-Way	150	500

Storage Temperature: -55°C to +70°C

Declaration of Conformity in accordance with European Directive 94/9/EC
Manufacturer: Hawke International
Address: Oxford Street West, Ashton-under-Lyne, OL7 0NA, United Kingdom.

Equipment Type: Range of Connectors: Instrumex

Directive 94/9/EC ATEX
Provisions of the Directive fulfilled by the Equipment: Group II Category 2GD Exde IIC Gb, Extb IIIC Db – IP66
Notified Body for EC-Type Examination: SGS-Baseefa 1180 Buxton UK
EC-type Examination Certificate: Baseefa06TEX0061X
Notified Body for production: SGS-Baseefa 1180 Buxton UK
Harmonised Standards used:
EN 60079-0:2012, EN60079-1:2007, EN60079-7:2007, EN60079-31:2009

On behalf of the above named company, I declare that, on the date the equipment accompanied by this declaration is placed on the market, the equipment conforms with all technical and regulatory requirements of the above listed directives.

A. Tindall
Technical Manager