Level Switch LFFS

Safety instructions

This instrument is constructed and tested according to the current EU-directives and packed in technically safe condition. In order to maintain this condition and to ensure safe operation, the user must follow the instructions and warnings given in this instruction.

During the installation local standards have to be observed. Ignoring the warnings may lead to severe personal injury or substantial damage to property.

The product must be operated by trained staff. Correct and safe operation of this equipment is dependent on proper transport, storage, installation and operation.

All electrical wiring must conform to local standards and the connection must be made according to the connecting diagrams.

Before switching on the power supply take care that other equipment is not affected. Ensure that the supply voltage and the conditions in the environment comply with the specification of the device.

Before switching off the supply voltage check the possible effects on other equipment and the processing system.

74 - 03

When the top cover is removed
do not look directly at LED
with unshielded eyes or
damage to retina may occur !!

WARNING

This product contains no replaceable parts.
In case of malfunction the product must be shipped to Baumer for repair

Description

The Level Switch LFFS designed to detect levels in tanks, media separation and provide empty-pipe detection or dry-run protection for pumps.

A high frequency sweep signal is radiated from the sensor tip into the tank. The media will act as a virtual capacitor, which together with a coil in the sensor head, will form a circuit creating the switch point signal. This virtual capacity will depend of the di-electric value of the media.

By means of the FlexProgrammer 9701 the output can be configured to either NPN, PNP or digital output signal. A damping of the output signal can be activated in case of a fluctuating media level, e.g. during tank filling.

The measurement is precise and unaffected by the mounting position in the tank. In the Flex-software a compensation for foam, bubbles and condensate as well as viscous media can be set.

The Flex-software also features an adjustment facility making the user able to adjust the sensor to a specific media.

The Level Switch LFFS measures liquids such as water and beer as well as viscous, sticky fluids, such as honey, youghurt, toothpaste and ketchup. Even dry medias can be measured, eg. sugar or flour.

The Level Switch LFFS is resistent against CIP and SIP agents.

Hygienic installation is also possible with the comprehensive range of accessories, see the overview at page 6.

Baumer

Measuring principle

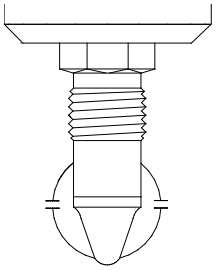

The media acts as a virtual capacitor from the sensor tip to the metal shaft or the welding part.

Mechanical Installation

Welding parts / Clamps

Please refer to “Accessories” data sheet. The welding part has an engraved mark or a leak hole. When the product has been mounted and correctly tightened the gland or M12 plug will align with this mark. Make sure that the gland/plug is pointing downwards to prevent fluids from penetrating into the instrument.

Mounting

Use only the authorised special designed accessories.
The product warranty is void when installed with other adapters.

Do not use teflon, paper or other gaskets. The PEEK tip against the stainless steel welding part will perform a hygienic tightening provided that the guidelines have been followed.

Due to the measuring principle it is essential that the sensor tip can “see” an ample amount of the metal shaft or welding part.

Tighten the union with a torque of:
Std. version 20...25 Nm.
Sliding connection 25...30 Nm.

After Installation and Configuration

Check the leak tightness of the sleeve.

Check the tightness of glands or M12 plugs.

Check the tightness of the cover.

Dimensional Drawings

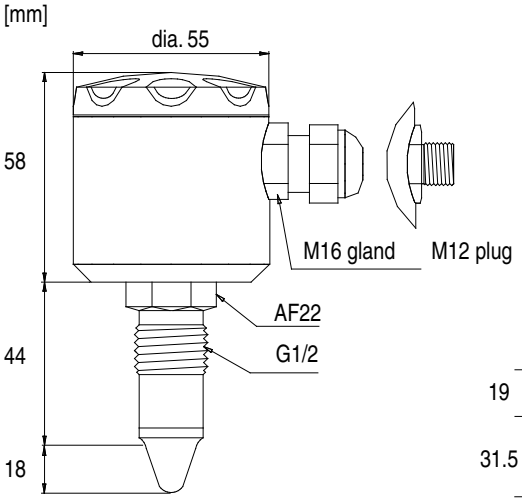

G1/2 Hygienic connection

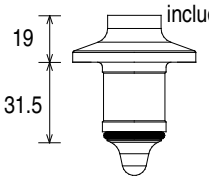

3A/DN38 Hygienic connection
O-ring EPDM incl.

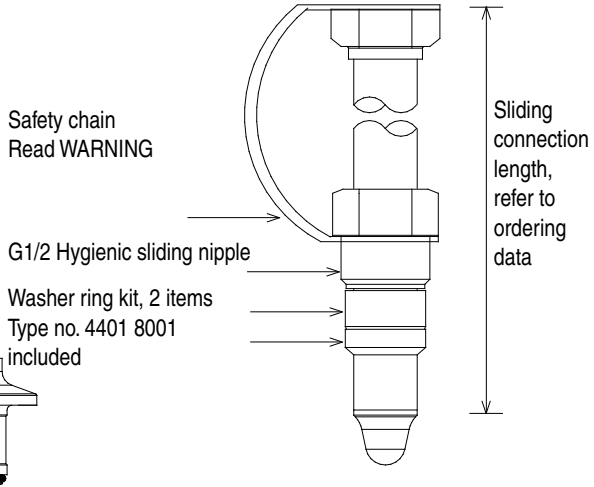

G1/2 Hygienic,
Sliding connection

Warning

The Level Switch LFFS with sliding connection can be mounted in installations with a static pressure up to 16 bar.
To prevent personal injuries and the Level Switch LFFS to slide out of the welding part or mounting accessory it is essential that the safety chain
is mounted correctly and undamaged.

Washer Ring Kit for the Sliding Connection

Washer ring kit for sliding connection, Type no. 4401 8001

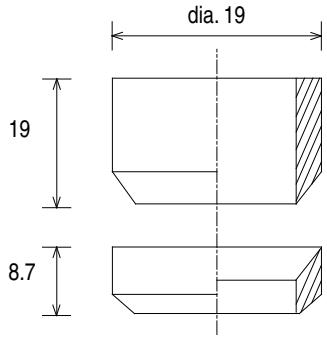

CAUTION: This end towards the mounting accessory and the media.

Mounting instructions:

1) Clean the sliding shaft.
2) Mount the smallest ring against the media as indicated.
3) Tighten the G1/2 Hygienic sliding nipple at 25...30 Nm.
4) Replace the Washer ring kit when one or both parts are permanently deformed or stick to the shaft of the sliding connection.

Electrical Connection

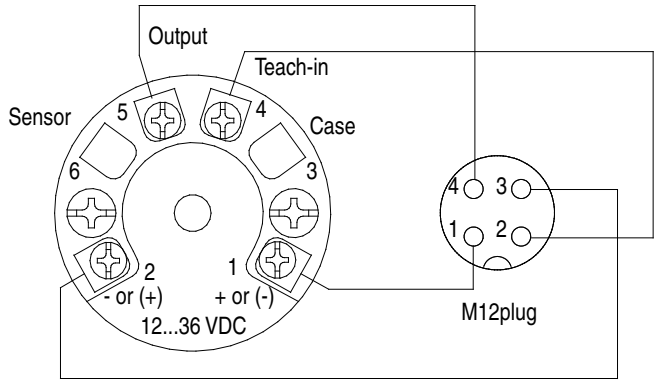

M12 plug: 1: Brown
2: White*
3: Blue
4: Black

*To avoid unintended Teach-In, be aware **not** to connect the Teach-In pin or expose it to any electrical noise during normal operation.

Electrical Installation

Normally Open

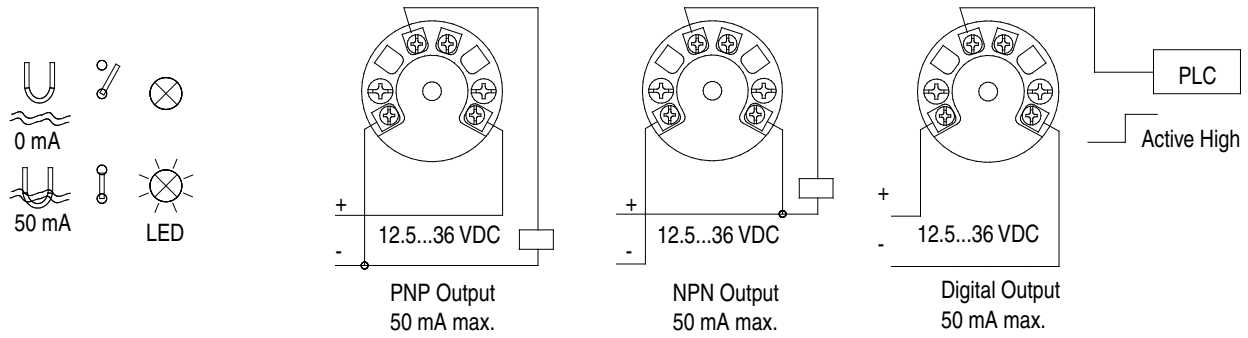

Normally Closed

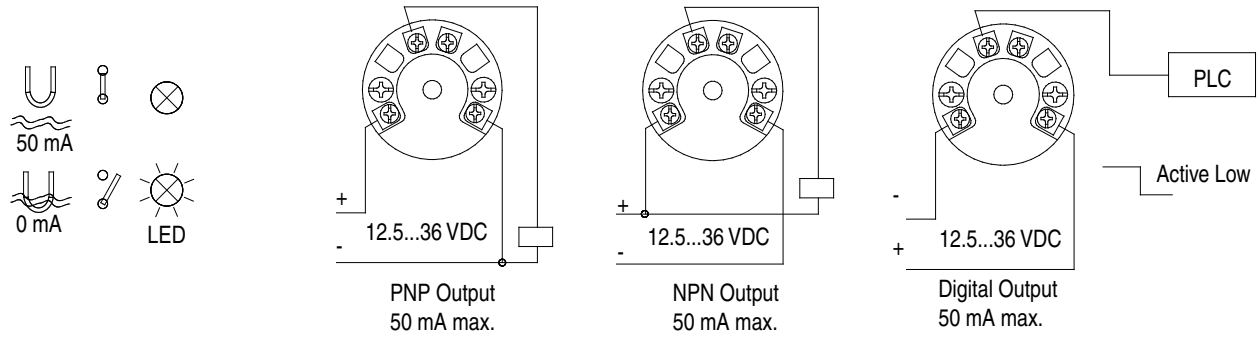

Configuration

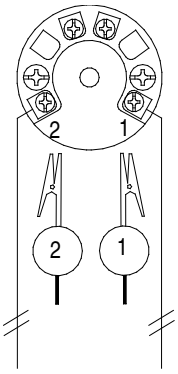

Disconnect the power supply before connecting the FlexProgrammer 9701 to the Level Switch LFFS

FlexProgrammer 9701

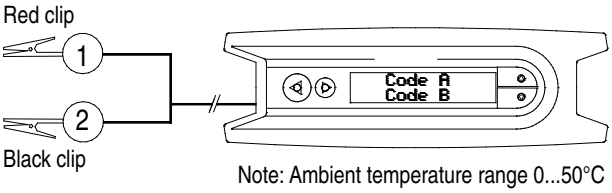

Note: Ambient temperature range 0...50°C

Accessories

The FlexProgrammer 9701 is a dedicated tool to configure all Baumer configurable Flex-products.

Type No. 9701-0001 complies:
FlexProgrammer
Cable with 2 aligator clips
Cable from FlexProgrammer to M12 plug for TE2
Cable from FlexProgrammer to M12 Plug for LFFS, LBFS, CPX
USB cable
CD with the FlexProgram software

Teach-In Using the FlexProgrammer 9701

Sophisticated settings for Teach-In as well as output type, diagnostics, data logging, tag no. and damping can be configured using the FlexProgrammer 9701. Integrated Help-menus will give full instructions.

Teach-In Manually

Make sure that power is on before Teach-In.
For best Teach-In it is important the product is fixed in the final application.
During Teach-In mode the light intensity of the LED will decrease to protect your eyes.

Step	To do	LED	Result
1	Connect terminal “Teach-In” to -VDC (T1 or T2) for 3.5 Sec.	Flash 1 time per Sec.	Ready for Teach-In
2	With “no media present” connect “Teach-In” to -VDC shortly	Light for 2 Sec. and then flash	Register “empty” state. Note.
3	With “media present” connect “Teach-In” to -VDC shortly	Light for 2 Sec.	Register “full” state, store and return to normal operation with the new settings
If Teach-In for some reason do not succeed, the Level Switch LFFS will enter “Error State” and reload factory settings automatically. The factory settings can always be reloaded by connecting the terminal “Teach-In” to -VDC for more then 6.5 Secs. A reloaded factory settings will be confirmed by pulsing light intensity 3 times.			

Note.
If the media is sticky, foamy, powdery or in other ways leaving parts of the media at the sensor tip this situation has to be established also during the Teach-In process. Otherwise a faulty calibration can be the result.

Error State Description	LED	Result
Error State	Blinking, 3 short and 1 long blink	Can normally be fixed by powering off and on. Alternatively remake the “Teach-In” procedure or make a configuration by the Flexprogrammer 9701.

Note.
Please observe that the Level Switch LFFS has been factory adjusted to measure liquids with DK-values > 2, such as oil.
In case the media has a lower DK-value e.g. powder, a Teach-In procedure must be carried out for the media alternatively a manual adjustment using the FlexProgram software. The adjustment must be made at the medias working temperature to avoid faulty measurements due to temperature drift.

Accessories - Overview

LFFS-xx1

LFFS-xx3/4

LFFS-xx2

CAM023

VAM 023

MAM02x-xxx

LAM020-1

SAM020-051-1

RAM020-1

RAM020-2

Please refer to the data sheet "Accessories Universal" for these accessories.

PM023

PM021

PM022-x

PM025

Welding part 3A/DN38 hygienic
81 26-916

Welding part 3A/DN38 hygienic
81 26-928

Please refer to the data sheet "FlexBar Accessories" for this accessory.

The Sliding Connection (Figure 1)

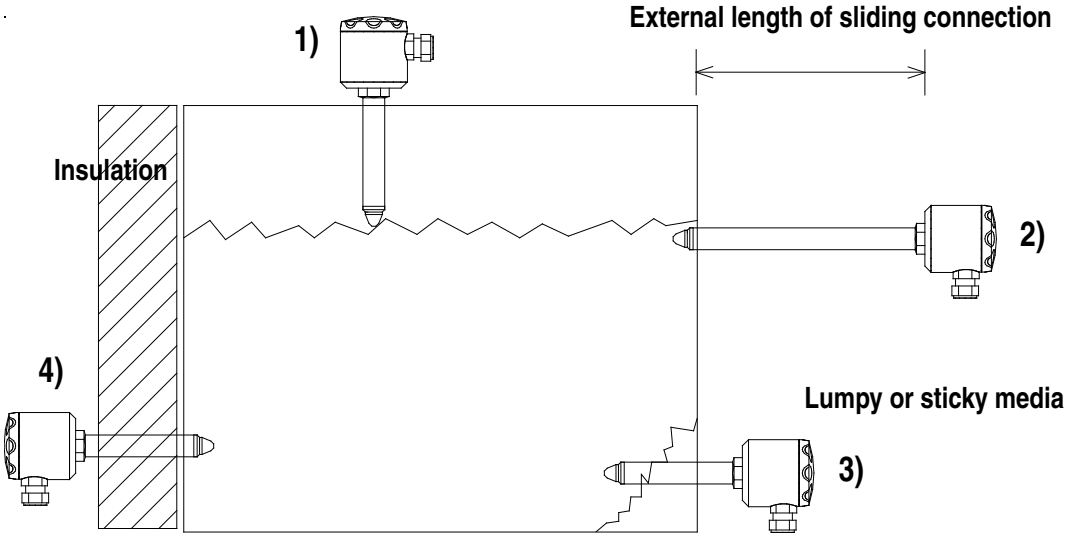

The drawing shows how the sliding connection can be used for at least 4 applications:
1) Mounted at the top of a tank to adjust to a maximum level.
2) Serving as a cooling neck in high media temperature applications.
3) Adjusted to place the sensor tip deeper inside the tank.
4) To reach in through insulation material.

It is essential that the max. ambience temperature for the electronics is never exceeded. For ATEX approved products please refer to table 1.

The working conditions for the sliding connection in different media temperatures and specified ambient temperatures can be found in curve 1.

Example, how to read Curve 1:
A 250 mm sliding connection is mounted in a tank with a total insert length of 150 mm. Hence the external length of the sliding connection will be 250 - 150 = 100 mm.
The media temperature will be max. 160 °C.
Read the x-axis at 100 mm an the y-axis at 160°C and find that the ambient temperature must be kept below 50°C. In case the radiated heat from the tank will cause a higher ambient temperature at the housing efficient insulation of the tank must be established.

Media Temperature versus External Length of Sliding Connection (Curve 1)

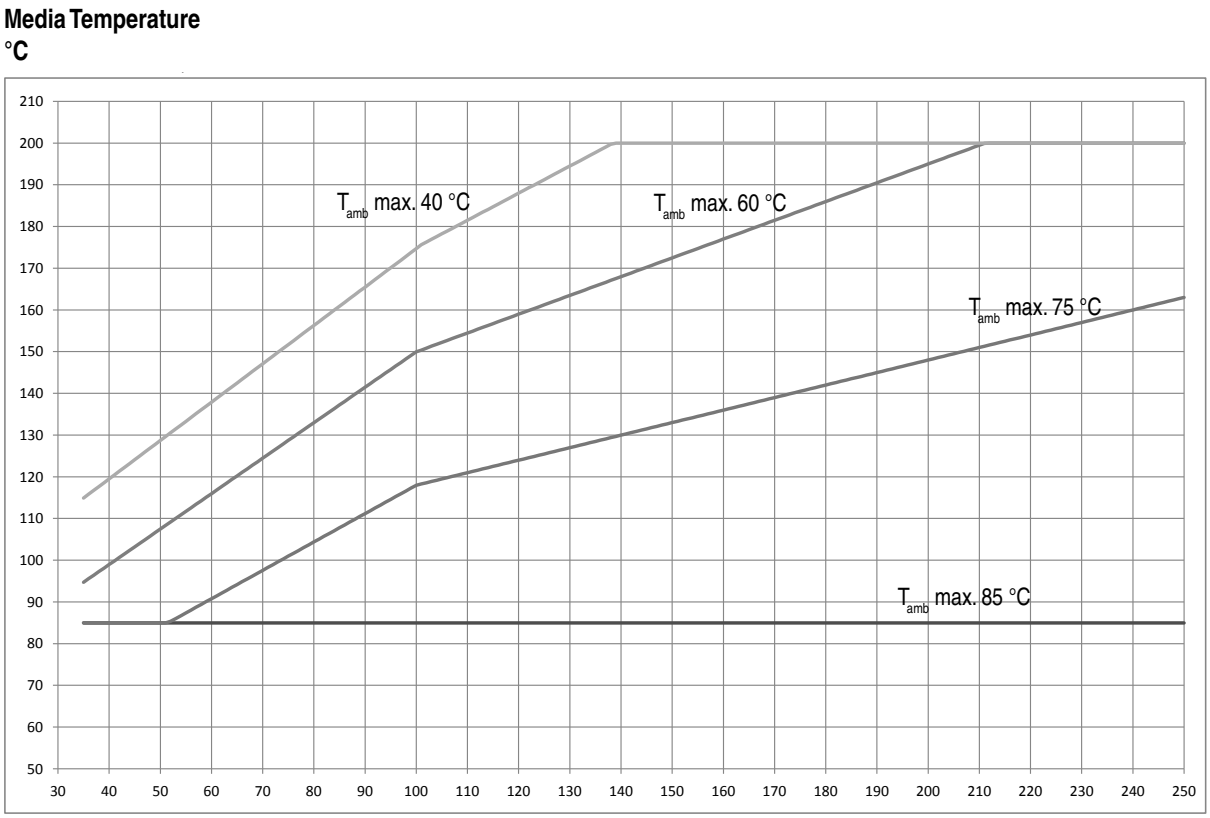

External length of sliding connection (mm) See figure 1

NB: Std. + 3A/DN38 = 35 mm extenal length

3-A Certificate

The 3-A mark is valid only when the product is mounted in a 3-A marked counter part and installed according to the installation manual. Use also a 3-A marked O-ring or gasket if relevant. The 3-A marked products conforms to the 3-A Sanitary Standard criteria. Materials and surfaces fulfill the FDA demands and are certified by EHEDG.

EPDM O-rings supplied with 3-A marked products are conform to Sanitary Standard Class II (8% milk fat max.)

EPDM gaskets supplied with 3-A marked products are conform to Sanitary Standard Class I (8% milk fat max.)

Level Switch LFFS, example

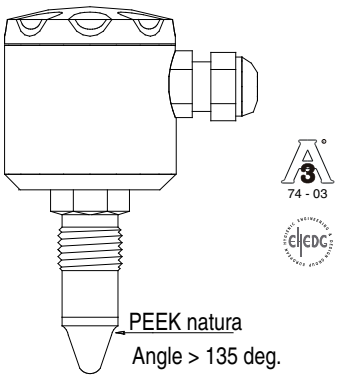

Mounting of 3A Approved and EHEDG certified Products

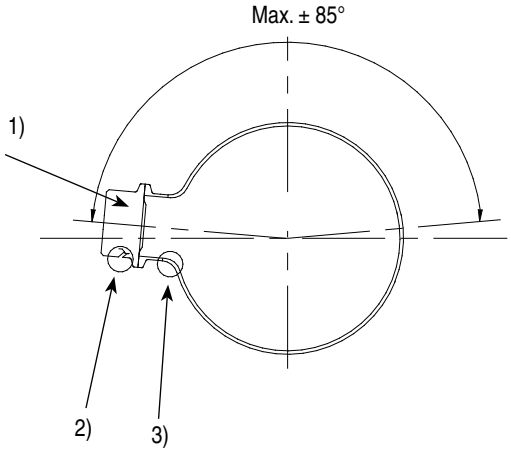

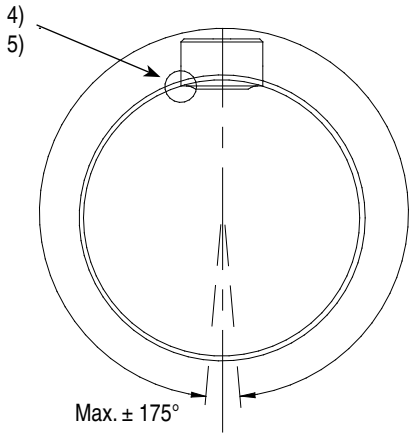

Installation of 3A approved and EHEDG certified products:

1) Use only a 3A approved counter part.

2) The inspection hole should be visible and drained.

3) Mount the instrument in a self drained position.

4) Level the inner surface of the pipe with the counter part.

5) Weldings should be grinded to Ra= 0.8

Refer to the data sheet “Accessories” for O-rings, gaskets and other accessories.

Ex-Configuring

The FlexProgrammer 9701 configuring unit must not be connected to the Level Switch LFFS within the hazardous area.

Configuring procedure:

a) Disconnect mains from the 4...20 mA loop circuit.
b) Disconnect the Level Switch from the circuitry within the hazardous area.
c) Uninstall and bring the Level Switch to the safe area.
d) Connect the FlexProgrammer 9701 and perform the configuring session.
e) Re-install the Level Switch in the hazardous area.
f) Connect the power supply to the circuit.

Warnings

WARNING

This product contains no replaceable parts.
In case of malfunction the product must be shipped to Baumer for repair.

Conditions for Ex-Certification (Table 1)

Connection Type	Tamb °C	Media Temp. max. °C	Note
Std. & 3A/DN38	-40...85	85	
	-40...60	95	{2}
	-40...40	115	{2}
Sliding 100 mm	-40...85	85	
	-40...60	150	{2}
	-40...40	175	{2}
Sliding 250 mm	-40...85	85	
	-40...60	195	{2}
	-40...40	200	{2} {3}

Note {2}: Provided that the sensor tip at the instrument is the only part in contact with the media.
Note {3}: Max. allowed media temperature.

Ex ia IIC T5, ATEX II 1G - Installation

A Level Switch LFFS-1xx is Ex ia IIC T5, ATEX II 1G approved for application in hasardous areas in accordance with the current EU-directives. The product must be installed in accordance with prevailing guidelines for zone 0 with a barrier.
A certified Ex ia or isolation barrier with the maximum values U_{max} = 30 VDC ; I_{max} = 0.1 A ; P_{max} = 0.75 W must be used.

Ex-data

Supply range	24...30 VDC
Temperature class	T1...T5: See table 1
Internal inductivity	$L_i \leq 10$ µH
Internal capacity	$C_i \leq 33$ nF
Barrier data	U ≤ 30 VDC ; I ≤ 0.1 A ; P ≤ 0.75 W

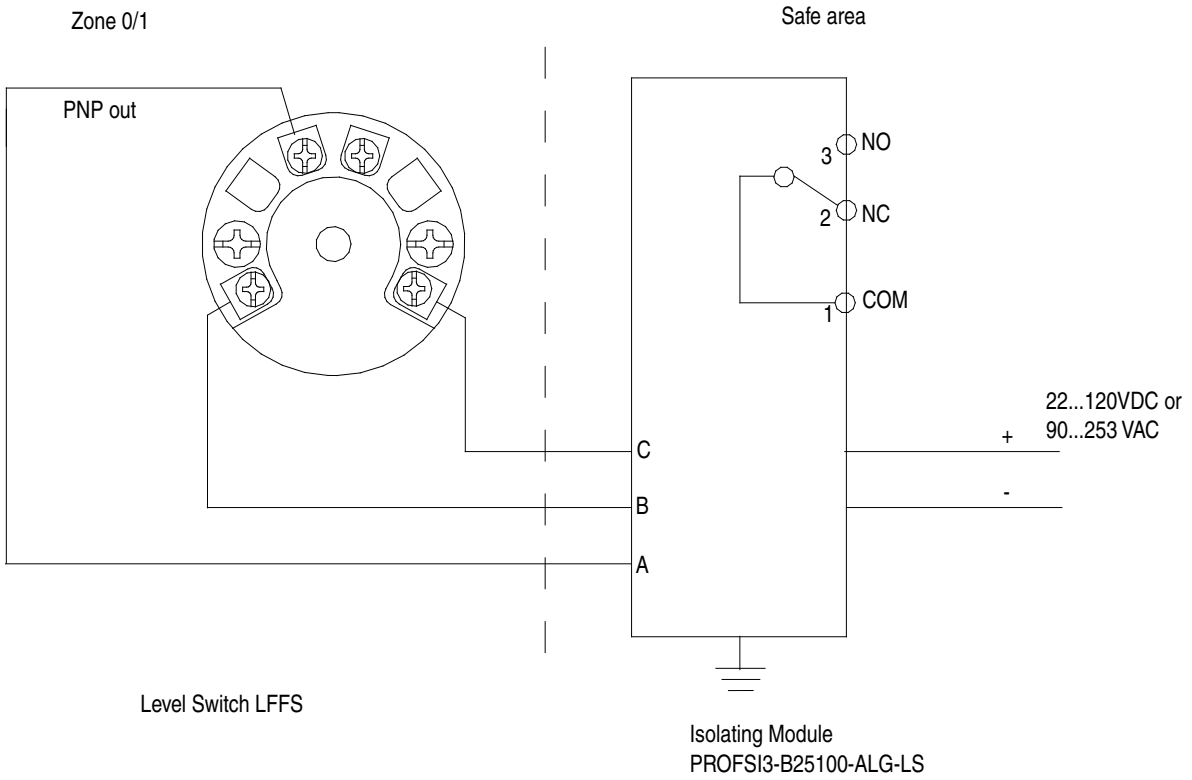

NB: Only valid for PNP output

Ex tD A20 IP67 T100, ATEX II 1D - Installation

A Level Switch LFFS-2xx is Ex tD A20 IP67 T100°C, ATEX II 1D approved for application in hasardous areas in accordance with the current EU-directives. The product must be installed in accordance with prevailing guidelines for zone 20 without a barrier.

Ex-data

Supply range	12,5...30 VDC, max 100 mA
Temperature class	T100: See table 1

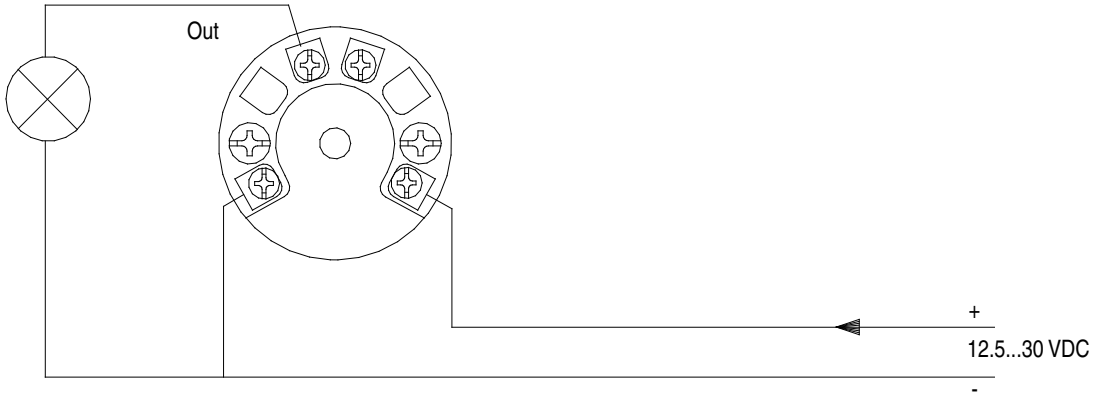

External lamp Level Switch LFFS

Ex nA II T5, ATEX II 3G - Installation

A Level Switch LFFS-3xx is Ex nA II T5, ATEX II 3G approved for application in hasardous areas in accordance with the current EU-directives. The product must be installed in accordance with prevailing guidelines for zone 2 without a barrier.

Ex-data

Supply range	12.5...30 VDC, Max. 0.1A
Temperature class	T1...T5: See table 1

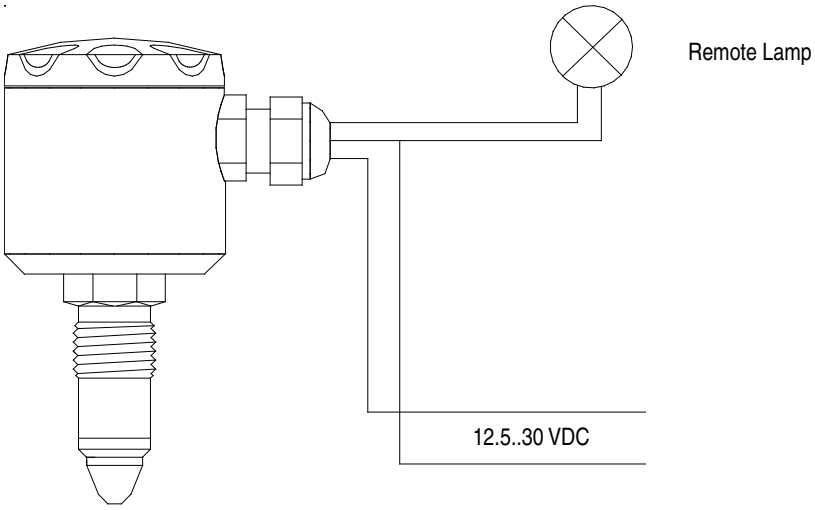

Level Switch LFFS