NexLED with Exit Sign kit

NexLED with green LED's

The NexLED bulkhead utilises the latest LED technology to provide instant illumination. The NexLED requires no re-lamping making it virtually maintenance free and unaffected by low temperatures. This combination makes the NexLED ideal for extreme environmental applications.

Coloured LED options are also available.

	Standard Specification
Enclosure	Epoxy painted RAL-9005 black matt find textured aluminium alloy LM6 body with toughened glass and silicone rubber gasket
Reflector	Brushed aluminium
Entry	3 x M20 cable entries
Termination	4 core 4mm² max conductor with looping
Installation	Surface mounted, 4 mounting holes located outside of seal
Lamp Type	2 x 1W light emitting diodes or 8 x 1W light emitting diodes. Colour: white
Control Gear	Electronic
Burning Position	Universal
Ingress Protection	IP66/67 to EN 60529
Emergency Duration	3 hours (emergency models)
Electrical Supply	120-240V 50/60Hz 220-254V 50/60Hz (emergency models only)

Features

- Highly visible, instant light
- No re-lamping required - over 60,000 hours* continuous operation
- Easy to install and maintain
- Ultra long life, no relamping required
- Very low power consumption
- 100% output in emergency mode (Up to 3 hours)
- Rechargable Ni-mH batteries with charging indication
- Compatible with UPS systems

* 60,000 hours expected at 40°C ambient (L_{70}/B_{10})

Std. Cat No.	Wattage	Lamp Type	Ambient °C	Weight
NELI/201/LE	2W	Light Emitting Diode	-20 to 55	3.5kg
NELI/801/LE	8W	Light Emitting Diode	-20 to 55	3.5kg
NELI/201/LE/EM	2W	Light Emitting Diode	-20 to 55	3.5kg
NELI/801/LE/EM	8W	Light Emitting Diode	-20 to 55	3.5kg

Options – Suffix to Catalogue No.

/RDE	Red LED's	/ADE	Amber LED's
/GDE	Green LED's	/LT	Low temperature -45°C to +55°C
/BDE	Blue LED's		

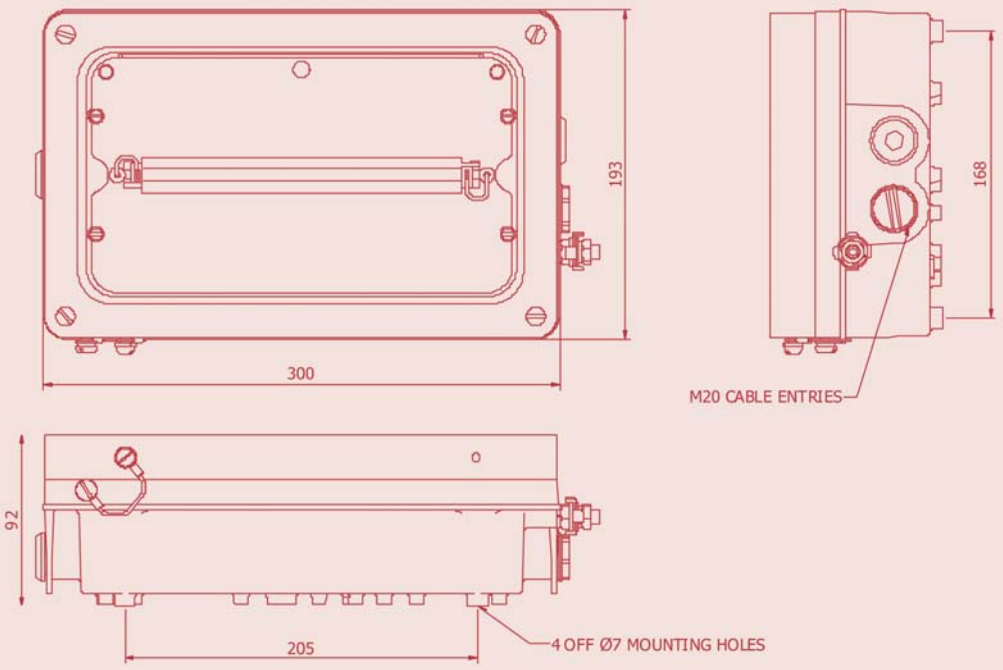

Accessories Should be ordered separately	Catalogue Order Code
Green exit sign kit (4 labels - up, down, left and right)	SNEL1-0008

Product design and specifications are subject to change without notice, please check the Chalmit® website for latest specifications.