Assembly Instructions for cable gland type 701 UL® cUL® 32R4

Assembly Instructions
AI 315 (A - F) / 342 (H)
Issue D - 04/03

HAWKE International

Class I Zone I AExe II (MCHL) Class I Zone 2 AExe II (MC)
See Schedule of Limitations : AExe

Operating temperature range -50°C +60°C Listing No. E84940

1. **Backnut**
2. **Middle Nut**
3. **Armour Grounding Device**
4. **Armour Stop**
5. **Entry (with captive deluge seal), if fitted**

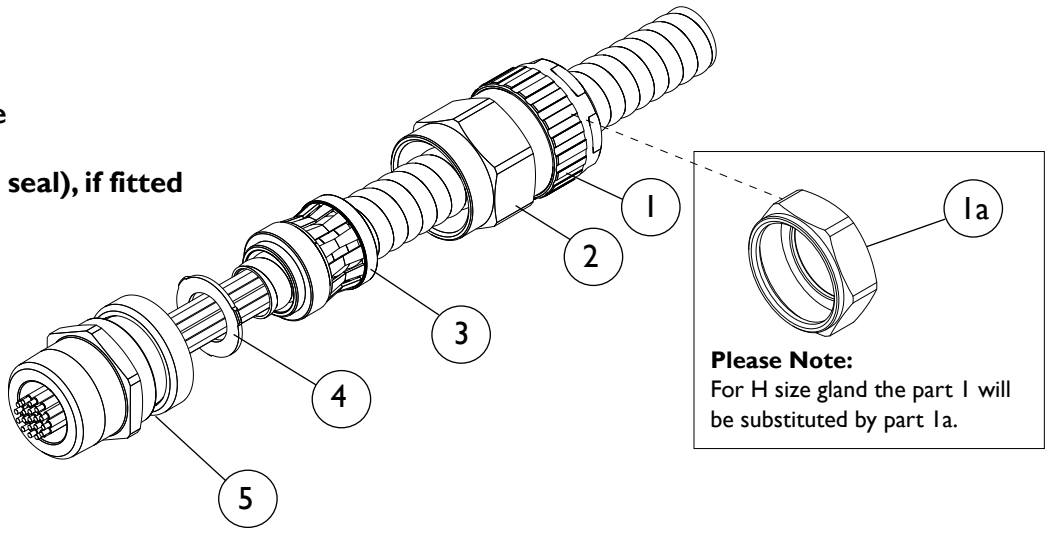

Please Note:
For H size gland the part 1 will be substituted by part 1a.

Cable Preparation

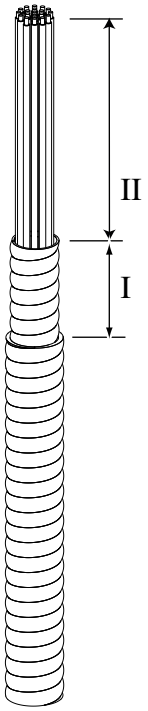

Cable Gland Preparation

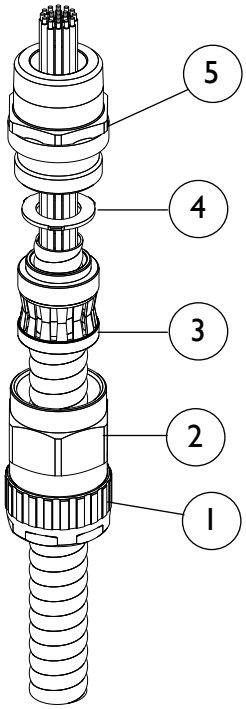

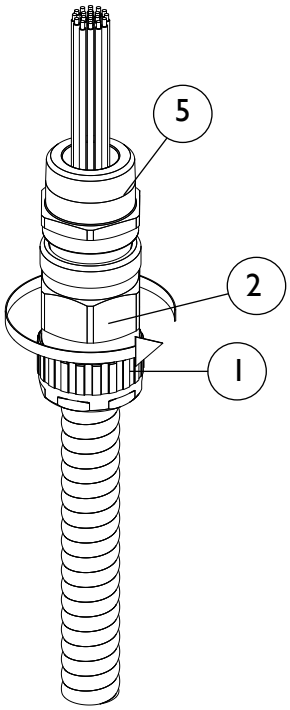

A
Strip cable to suit equipment as shown above, exposing metal armour sheath (I) and insulated cores (II).
I = 7/8" (23mm) for A size glands
I = 1 1/16" (27mm) for B size glands
I = 1 1/4" (31mm) for C & C2 size glands
I = 1 1/2" (39mm) for D size glands
I = 1 3/8" (34mm) for E, F & H size glands
II to suit equipment

B
Push the cable through the sub-assembly ①&② and the armour grounding device ③ as shown.

The glands are supplied fitted with an armour stop ④. If the metal armour sheath will pass through the entry component ⑤ then fit the armour stop in place over the conductors as indicated above, otherwise discard the armour stop ④. This ensures that the armour sheath does not pass completely through the gland.

C
Place the entry component ⑤ over the conductors such that the metal armour sheath butts up to the entry bore or armour stop (if fitted). Tighten the middle nut ② onto the entry component ⑤, with a spanner / wrench until the armour grounding device ③ grips the metal armour sheath.
Then tighten the middle nut ② an extra half turn with a spanner / wrench.

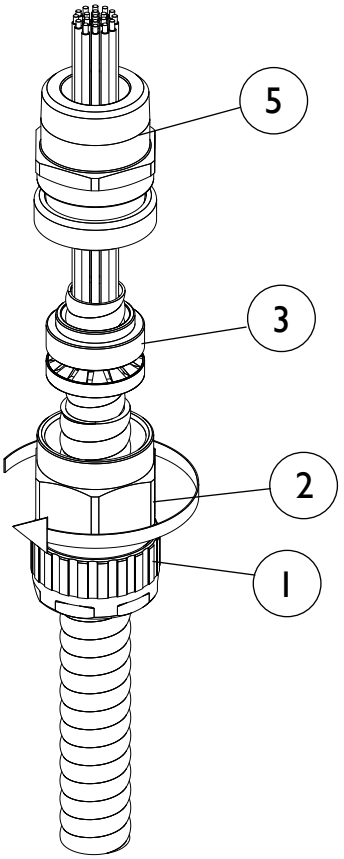

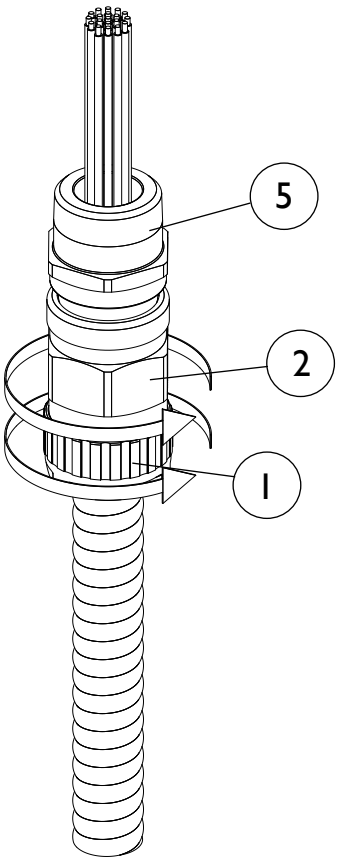

D
Unscrew the middle nut ② and visually inspect that the armour grounding device ③ has adequately clamped the metal armour sheath.

If not clamped fully, repeat step C.

E
Reassemble middle nut ② onto the entry component ⑤. Tighten up the middle nut ② until hand tight, then using a wrench / spanner, turn the nut through one hex. flat (e.g. 1/6 of a turn). Tighten the backnut ① to form a seal around the cable, then tighten a further full turn using a wrench / spanner. Ensure that the middle nut ② does not rotate when tightening the backnut ①.

Ensure that the deluge seal is pulled down into position if fitted. Locate the shroud over the cable gland, if applicable

CABLE GLAND SELECTION TABLE										
Size Ref.	Entry Thread Size		Cable Acceptance Details					Max Length	Hexagon Dimensions	
			Armour Sheath			Outer Sheath				
	Metric	NPT	Armour Stop Bore	Min.	Max.	Min.	Max.		Across Flats	Across Corners
A	M20	½" - ¾"	0.39"	0.41"	0.64"	0.49"	0.80"	3.35"	1.18"	1.36"
B	M25	¾" - 1"	0.48"	0.49"	0.93"	0.66"	1.02"	3.61"	1.42"	1.64"
C	M32	1" - 1¼"	0.83"	0.85"	1.23"	0.87"	1.29"	3.90"	1.81"	2.09"
C2	M40	1¼" - 1½"	1.14"	1.17"	1.59"	1.10"	1.61"	4.01"	2.17"	2.50"
D	M50	1½" - 2"	1.35"	1.37"	1.96"	1.42"	2.07"	4.94"	2.56"	2.96"
E	M63	2" - 2½"	1.73"	1.76"	2.55"	1.81"	2.57"	5.15"	3.15"	3.64"
F	M75	2½" - 3"	2.27"	2.29"	2.98"	2.24"	3.07"	5.17"	3.74"	4.31"
H	M90	3½"	2.90"	2.92"	3.47"	3.18"	3.52"	5.17"	4.18"	4.84"

SCHEDULE OF LIMITATIONS: AExe

1. This cable gland has an operating temperature range of -50°C to +60°C.

2. When the glands are used in increased safety applications a UL Listed sealing washer may be required between the external face of the enclosure and the gland sealing face in order to maintain the integrity of the increased safety enclosure.

3. A grounding / earth tag has been provided for use as a grounding point when the cable gland is used with plastic enclosures. This must be fitted to the wall of the enclosure using the threads of the gland and the locknut supplied.

Note: Grounding must be carried out in accordance with National Electrical Code Article 250 and 505.25. A correctly sized grounding conductor must be connected from the tag to the nearest internal connection point of the grounding circuit.

4. When the gland is used with enclosures having plain (strikethrough/drilled) entry holes, a UL listed (QRCV) sealing washer must be employed and the gland must be secured to the enclosure using the locknut provided.

ACCESSORIES:

Before cable gland assembly or stripping of the cable gland assembly, consideration should be given to any cable gland accessories that may be required, such as: -

- Shroud, to offer additional corrosion protection.
- Locknut, to secure cable glands into position.
- Sealing washer or suitable thread sealant, to offer additional ingress protection of the enclosure at the cable gland entry.
- Earthtag, to provide an external armour / braid bonding point.
- Serrated washer, to dampen any vibrations that may loosen the locknut or cable gland assembly.

Visit our Website at www.ehawke.com

Smarter products

Hawke International is a division of
Hubbell Ltd.
A member of the Hubbell Group of Companies.

Hawke Cable Glands Ltd
Oxford Street West,
Ashton-under-Lyne,
Lancashire OL7 0NA. UK.
Tel: +44 (0) 161 308 3611
Fax: +44 (0) 161 308 5848
E-mail: sales@ehawke.com
www.ehawke.com

Hawke Cable Glands America L.C.
600 Kenrick, Suite C-10,
Houston, TX. 77060, USA
Tel: +1 (281) 445 7400
Wats: (800) 354 9189
Fax: +1 (281) 445 7404
E-mail: america@ehawke.com
www.ehawke.com

Hawke Asia-Pacific Pte Ltd
130 Joo Seng Road, #03-02
Olivine Building
Singapore 368357
Tel: 00 65 6282 2242
Fax: 00 65 6284 4244
E-mail: asia@ehawke.com
www.ehawke.com