Hazlux®

Hazlux® Hazardous Location Lighting

In this section...

Hazlux® Hazardous Location Lighting

Overview I-2–I-7

Area Lighting

- Hazlux® 3 Class I, Division 2 ..... I-8–I-27
- Hazlite® M3 Class I, Division 2 ..... I-28–I-31
- Hazlux® 1 (Polymeric) Class I, Division 2 ..... I-32–I-36
- Hazlite® M1 (Polymeric) Class I, Division 2 ..... I-37–I-40
- Hazlux® 5 Class I, Division 1 ..... I-41–I-48
- Hazlite® M5 Class I, Division 1 ..... I-49–I-52
- Hazlite® M4 Class 1, Division 2 ..... I-53–I-61

Floodlights

- Hazlux® 3 Class I, Division 2 ..... I-62–I-65

Emergency Lighting

- HazBatt® H3 Class I, Division 2 ..... I-66–I-69
- HazBatt® M5 Class I, Division 1 ..... I-70–I-72
- HazFlash® M4 (Strobe) Class I, Division 2 ..... I-73–I-74
- HazFlash® M5 (Strobe) Class I, Division 1 ..... I-75–I-76

Thomas&Betts

www.tnb.com

Overview

Hazardous Locations

Hazardous Location — An area where the possibility of explosion and fire is created by the presence of flammable gases, vapors, dust, fibers or flyings.

Class I — Gas

Class I — NEC® 500.5(B) — Class I locations are those in which flammable gases, flammable liquid-produced vapors or combustible liquid-produced vapors are or may be present in the air in quantities sufficient to produce explosive or ignitable mixtures.

Typical Class I Locations:

- Petroleum refineries and gasoline storage and dispensing areas
- Industrial firms that use flammable liquids in dip tanks for parts cleaning or other operations
- Petrochemical companies that manufacture chemicals from gas and oil
- Dry cleaning plants where vapors from cleaning fluids can be present
- Companies that have spraying areas where they coat products with paint or plastics
- Aircraft hangars and fuel serving areas
- Utility gas plants and operations involving storage and handling of liquified petroleum gas or natural gas

Class II — Dust

Class II — NEC® 500.5(C) — Class II locations are those that are hazardous because of the presence of combustible dust.

Typical Class II Locations:

- Grain elevators, flour and feed mills
- Plants that manufacture, use or store magnesium or aluminum powders
- Plants that have chemical or metallurgical processes: producers of plastics, medicines and fireworks, etc.
- Producers of starch or candies
- Spice-grinding plants, sugar plants and cocoa plants
- Coal preparation plants and other carbon handling or processing areas

Class III — Fibers

Class III — NEC® 500.5(D) — Class III locations are those that are hazardous because of the presence of easily ignitable fibers or where materials producing combustible flyings are handled, manufactured or used, but in which such fibers/flyings are not likely to be in suspension in the air in quantities sufficient to produce ignitable mixtures.

Typical Class III Locations:

- Textile mills, cotton gins, cotton seed mills and flax processing plants
- Any plant that shapes, pulverizes or cuts wood and creates sawdust or flyings

***Note**: Fibers and flyings are not likely to be suspended in the air but can collect around machinery or on lighting fixtures and where heat, a spark or hot metal can ignite them.*

Division 1 — Normally Hazardous

Division 1 — Hazardous gases or dusts are present under normal operation conditions or during frequent repair and maintenance activity.

Groups A, B, C, D

Groups A, B, C and D (NEC® 500.6 (A)) — The gases and vapors of Class I locations are broken into four groups by the code A, B, C and D. These materials are grouped according to the ignition temperature of the substance, its explosion pressure and other flammable characteristics.

Groups E, F, G

Groups E, F, G (NEC® 500.6 (B)) — Class II dust locations groups E, F and G are classified according to the ignition temperature and the conductivity of the hazardous substance.

Division 2 — Not Normally Hazardous

Division 2 — Hazardous gases or dusts are not present under normal operating conditions.

Articles 500 through 505 (2011 NEC®) — Explains in detail the requirements for the installation of wiring or electrical equipment in hazardous locations. These articles along with other applicable regulations, local governing inspection authorities, insurance representatives and qualified engineering/technical assistance should be your guides to the installation of wiring or electrical equipment in any hazardous or potentially hazardous location.

***Note**: These are simplified definitions — complete data is in the referenced 2011 NEC®.*

NEC and National Electrical Code are registered trademarks of the National Fire Protection Association, Inc.

Overview

Four-Step Method for Selecting Lighting Fixtures for Hazardous Locations

1. Select a fixture that meets your Class, Division and Group requirements.

Examples: Class I, Division 2, Group D
Class II, Division 1, Group G

2. Determine the T-Number for your selected fixture. Be sure it is for the specific wattage, ballast housing, optical assembly and ambient temperature.

- Use the published information in this catalog or in Hazlux® product brochures

3. Determine the Maximum Allowable Temperature for the hazardous materials involved.

- Class I Gas: Ignition Temperature for the Specific Gas (from pp. I-4–I-6 of this catalog or from NFPA497M)
- Class II Dust:
  - Group E.....200° C
  - Group F.....200° C
  - Group G.....165° C
  - Or ignition temperature of dust if lower
  - Above from NEC® Table 500-3(F)

4. Compare T-Number (from Step 2) to Maximum Allowable Temperature (from Step 3).

- If T-Number is cooler than the Maximum Allowable Temperature, the selected fixture is suitable.
- If T-Number is hotter than the Maximum Allowable Temperature, the selected fixture is not suitable.

T-Number Table

CLASS I, II, DIV. 1, 2 T-NUMBER	MAX. TEMP. (IN °C)
T1	450
T2	300
T2A	280
T2B	260
T2C	230
T2D	215
T3	200
T3A	180
T3B	165
T3C	160
T4	135
T4A	120
T5	100
T6	85

Overview

Ignition Temperatures and Group Classifications for Flammable Gases and Vapors

MATERIAL	GROUP	AUTOIGNITION TEMPERATURE DEGREES F	AUTOIGNITION TEMPERATURE DEGREES C
Acetaldehyde	C	347	175
Acetic Acid	D	867	464
Acetic Anhydride	D	600	316
Acetone	D	869	465
Acetone Cyanohydrin	D	1270	688
Acetonitrile	D	975	524
Acetylene	A	581	305
Acrolein (Inhibited)	B (C)	455	285
Acrylic Acid	D	820	438
Acrylonitrile	D	898	481
Allyl Alcohol	C	713	378
Allyl Chloride	D	905	485
Alpha-Methyl Styrene	D	1066	574
Ammonia	D	928	498
n-Amyl Acetate	D	680	360
Aniline	D	1139	615
Benzene	D	928	498
Benzyl Chloride	D	1085	585
1.3-Butadiene	B (D)	788	420
Butane	D	550	288
1-Butanol	D	650	343
2-Butanol	D	761	405
n-Butyl Acetate	D	790	421
n-Butyl Acrylate (Inhibited)	D	559	293
Butylamine	D	594	312
Butylene	D	725	385
n-Butyraldehyde	C	425	218
n-Butyric Acid	D	830	443
Carbon Disulfide	*	194	90
Carbon Monoxide	C	1128	609
Chlorobenzene	D	1099	593
Cresol	D	1038–1110	559–599
Crotonaldehyde	C	450	232
Cumene	D	795	424
Cyclohexane	D	473	245
Cyclohexanol	D	572	300
Cyclohexanone	D	473	245
Cyclohexene	D	471	244
Cyclopropane	D	938	503
p-Cymene	D	817	436
n-Decanol	D	550	288
Decene	D	455	235
Di-Isobutyl Ketone	D	745	396
Di-Isobutylene	D	736	391
Di-N-Propylamine	C	570	299
Diacetone Alcohol	D	1118	603
o-Dichlorobenzene	D	1198	647
1.1-Dichloroethane	D	820	438

** Carbon Disulfide has characteristics which require safeguards beyond those required for any of the above groups.*

MATERIAL	GROUP	AUTOIGNITION TEMPERATURE DEGREES F	AUTOIGNITION TEMPERATURE DEGREES C
1.2-Dichloroethylene	D	860	460
Dicylopentadiene	C	937	503
Diethyl Benzene	D	743–842	395–450
Diethyl Ether	C	320	160
Diethylamine	C	594	312
Diethylene Glycol Monobutyl Ether	C	442	228
Diethylene Glycol Monomethyl Ether	C	465	241
n-n-Dimethyl Aniline	C	700	371
Dimethyl Formamide	D	833	455
Dimethyl Sulfate	D	370	188
Dimethylamine	C	752	400
1,4-Dioxane	C	356	180
Dipentene	D	458	237
Dodecene	D	491	255
Du-Isopropylamine	C	600	316
Epichlorohydrin	C	772	411
Ethane	D	882	472
Ethanol	D	685	363
Ethyl Acetate	D	800	427
Ethyl Acetate (Inhibited)	D	702	372
Ethyl Benzene	D	810	432
Ethyl Chloride	D	966	519
Ethyl Formate	D	851	455
2-Ethyl Hexanol	D	448	231
2-Ethyl Hexyl Acrylate	D	485	252
Ethyl Mercaptan	C	572	300
Ethylamine	D	725	385
Ethylene	C	842	450
Ethylene Chlorohydrin	D	797	425
Ethylene Dichloride	D	775	413
Ethylene Glycol Monobutyl Ether	C	460	238
Ethylene Glycol Monobutyl Ether Acetate	C	645	340
Ethylene Glycol Monoethyl Ether	C	455	235
Ethylene Glycol Monoethyl Ether Acetate	C	715	379
Ethylene Glycol Monomethyl Ether	D	545	285
Etheylene Oxide	B (C)	804	429
Ethylenediamine	D	725	385
Ethylenimine	C	608	320
2-Ethylehexaldehyde	C	375	191
Formaldehyde (Gas)	B	795	429
Formic Acid (90%)	D	813	434
Fuel Oils	D	410–765	210–407
Furfural	C	600	316
Furfuryl Alcohol	C	915	490
Gasoline	D	536–880	280–471
Heptane	D	399	204
Heptene	D	500	260
Hexane	D	437	225

United States
Tel: 901.252.8000
800.816.7809
Fax: 901.252.1354

Technical Services
Tel: 888.862.3289

www.tnb.com

Overview

MATERIAL	GROUP	AUTOIGNITION TEMPERATURE DEGREES F	AUTOIGNITION TEMPERATURE DEGREES C
2-Hexanone	D	795	424
Hexenes	D	473	245
Hydrazine	C	74–518	23–270
Hydrogen	B	968	520
Hydrogen Cyanide	C	1000	538
Hydrogen Sulfide	C	500	260
Iso-Butyl Acetate	D	790	421
Iso-Octyl Aldehyde	C	387	197
Isoamyl Acetate	D	680	360
Isoamyl Alcohol	D	662	350
Isobutyl Acrylate	D	800	427
Isobutyraldehyde	C	385	196
Isophorone	D	860	460
Isoprene	D	428	220
Isopropyl Acetate	D	860	460
Isopropyl Ether	D	830	443
Isopropylamine	D	756	402
Kerosene	D	410	210
Liquified Petroleum Gas	D	761–842	405–450
Mesityl Oxide	D	652	344
Methane	D	999	537
Methanol	D	725	385
Methyl Acetate	D	850	454
Methyl Acrylate	D	875	468
Methyl Ether	C	662	350
Methyl Ethyl Ketone	D	759	404
Methyl Formal	C	460	238
Methyl Formate	D	840	449
Methyl Isobutyl Ketone	D	840	449
Methyl Isocyanate	D	994	534
Methyl Methacrylate	D	792	422
Methyl N-Amyl Ketone	D	740	393
2-Methyl-1-Propanol	D	780	416
2-Methyl-2-Propanol	D	892	478
Methylamine	D	806	430
Methylcyclohexane	D	482	250
Methylcyclohexanol	D	565	296
Monoethanolamine	D	770	410
Monoisopropanolamine	D	705	374
Monomethyl Aniline	C	900	482
Monomethyl Hydrazine	C	382	194
Morpholine	C	590	310
Naphtha (Coal Tar)	D	531	277
Naphtha (Petroleum)	D	550	288
Nitrobenzene	D	900	482
Nitroethane	C	778	414
Nitromethane	C	785	418
2-Nitropropane	C	802	428

MATERIAL	GROUP	AUTOIGNITION TEMPERATURE DEGREES F	AUTOIGNITION TEMPERATURE DEGREES C
1-Nitropropane	C	789	421
Nonane	D	401	205
Octane	D	403	206
Octene	D	446	230
Pentane	D	470	243
1-Pentanol	D	572	300
2-Pentanone	D	846	452
1-Pentene	D	527	275
Propane	D	842	450
2-Propanol	D	750	399
1-Propanol	D	775	413
Propionaldehyde	C	405	207
Proprionic Acid	D	870	466
Proprionic Anhydride	D	545	285
N-Propyl Acetate	D	842	450
N-Propyl Ether	C	419	215
Propyl Nitrate	B	347	175
Propylene	D	851	455
Propylene Dichloride	D	1035	537
Propylene Oxide	B (C)	840	449
Pyridine	D	900	482
Styrene	D	914	490
Tetrahydrofuran	C	610	321
Tetrahydronapthalene	D	725	385
Toluene	D	896	480
Turpentine	D	488	253
Unsymmetrical Dimethyl Hydrazine (Udmh)	C	480	249
Valeraldehyde	C	432	222
Vinyl Acetate	D	756	402
Vinyl Chloride	D	882	472
Vinyl Toluene	D	921	494
Vinylidene Chloride	D	1058	570
Xylenes	D	867–984	464–529

Overview

Hazlux® Applications

Hose Down

Vibration

High Ambient

Dust

Corrosion

Marine

Ice

Wind

From an offshore oil rig in the Atlantic Ocean to the factory floor, there's a Hazlux® lighting fixture to stand up to virtually every hazardous location.

Here are some of the places you'll find Hazlux® fixtures:

- Chemical manufacturing and processing plants
- Oil refineries
- Oil drilling rigs
- Offshore platforms
- Pipeline pumping stations
- Pulp and paper plants
- Aluminum and copper smelting
- Steel mills and foundries
- Mining operations
- Grain handling facilities
- Flour, sugar and starch processing
- Food processing plants
- Paint and rubber manufacturing facilities
- Marine and coastal facilities
- Shipyards and shipbuilding plants
- Power generation plants
- Waste treatment facilities
- Paint, chemical and plastic mixing/storage areas
- Bulk truck terminals
- Solvent/cleaning areas

Hazlux® lighting fixtures are built to withstand the harsh environmental conditions that exist in real settings.

Overview

Hazlux® Applications

Hose-Down and Wet Locations

- Certified for wet locations — NEMA 4X, IP66 (indoor and outdoor); UL1598A (marine) and CSA Listed
- Superior gasketing system — both tank and globe gasketing systems withstand hose-down pressures
- Uninterrupted globe thread — assures positive seal
- Baked-on, dry epoxy coating — not paint but 100% dry solids
- Globes, refractors and finish designed to withstand thermal shock during hose down

High-Ambient Temperature Areas

- All standard fixtures are tested and listed for at least 40° C ambient — even under heavy dust blanket and no air flow
- Exclusive heat sink design results in a cool operating fixture, extended ballast/lamp life and lower maintenance costs
- Unmatched selection of high-ambient, temperature rated fixtures — contact factory for fixtures certified for 55° C and 65° C applications
- Steam spray and thermal shock resistant

Corrosion and Abrasion

- Baked-on, dry epoxy coating — not paint but 100% dry solids
- Stainless steel external hardware
- Sand-blast resistant finish
- Superior silicone gasketing system on both tank and globe. Other gasketing systems available for special corrosive applications such as phosphates
- Aluminum components contain less than 0.4% copper — maximum corrosion resistance
- Special HazCote® corrosion fighter finish available for extremely corrosive areas; consult Thomas & Betts for details

Ice and Arctic Conditions

- Gasketing system and finish allow for expansion and contraction through wide temperature variations
- Metal halide ballasts start at -29° C; high-pressure sodium ballasts start as low as -51° C (consult Thomas & Betts for details)
- High-strength mechanical mountings withstand extra ice loading
- Tempered glassware available for extra thermal shock safety margin

Vibration, Seismic Shock and Vandalism

- Vibration tested by UL and CSA
- Vibration-resistant hardware throughout fixture
- Screw retainers on guard ensure retention even if screws are not completely tightened
- Vibration-resistant globe thread and sealing system
- Optional refractors, high-strength tempered glass and Tuff-Skin® globes for protection from vandalism

Dust Blanket

- Tested and listed by UL and CSA
- Thermal performance is at 40° C ambient; optional thermal performance to 55° C and 65° C ambient available (consult factory)
- Cone pendant mount available (45° sloped sides) for areas where dust or other residue buildup is a problem
- Exclusive heat sink design — results in a cool operating fixture, extended ballast/lamp life and lower maintenance costs

Marine-Duty Option

- UL1598A Marine listed
- This feature is supplied as standard on most Hazlux® 3 fixtures; consult Thomas & Betts for details
- Designed for abuse — hose down, arctic, hurricane, vibration and shock, high temperature, corrosion and other environmental conditions typical of adverse marine locations
- Exclusive combination of marine and hazardous location approvals on the same fixture line

Wind

- Wind-tunnel tested at McDonnell Douglas Corporation at air flow speeds in excess of 198 mph (320 km/h)
- Guard specially designed to secure reflector during high wind loading
- All fasteners are stainless steel
- High-strength mechanical mountings withstand strong wind loads

***Note**: Tuff-Skin is a registered trademark of Thomas Manufacturing Corp.*

Area Lighting — Hazlux® 3 Class I, Div 2

Designed, Tested and Certified for Use in Hazardous Locations and Adverse Environments

New Labor-Saving Features for Hazlux® 3 Fixtures

Induction Lighting

Long life for reduced maintenance

Hazlux® 3 induction lighting provides a 100,000+ hour lamp life, drastically reducing expensive maintenance costs of industrial lighting in hazardous locations. For complete details, see **pages I-25–I-26**.

HazVertor® Adapter Ring

Replace other brand fixtures without removing the top hat

The HazVertor® adapter ring gives you the freedom to replace Crouse-Hinds Champ® series lighting fixtures (VMV, DMV or LMV types) with Hazlux® 3 lighting fixtures without removing the Crouse-Hinds top hat from the conduit system, eliminating the need to replace conduit and wiring.

Save time and increase efficiency. The HazVertor® can be ordered as a separate item or as part of a Hazlux® 3 fixture assembly. Look for the HV1 mounting style options and switch to increased efficiency, wider suitability for hazardous locations, improved light distribution and improved T-numbers.

Hazlux® UNIPAK® Packaging

- UNIPAK® is the Hazlux customized packaging system that is designed to save money for all concerned
- UNIPAK® fixtures are normally assembled and can include globes, guards, reflectors, lamps, fuses and other options
- Outlet boxes are normally shipped separately; consult factory regarding outlet boxes to be assembled to UNIPAK® fixtures
- Assembled UNIPAK® fixtures are shipped in one carton with the fixture foam packed in place
- Refer to the "Catalog Numbering System" for each individual Hazlux® fixture series for ordering information
- UNIPAK® saves seven ways:
  - Fewer cartons to receive, count, move, open and dispose
  - Fewer storage problems
  - Reduces inventory expense
  - Eliminates lost or back-ordered parts
  - Eliminates mismatched fixtures or lamps
  - Significantly reduces labor costs
  - Reduces total installed cost per fixture

Area Lighting — Hazlux® 3 Class I, Div 2

Fixtures for Class I, Division 2; Class II; Wet and Marine Locations

Applications

- Chemical Plants
- Oil Refineries
- Paint, Rubber Manufacturing
- Offshore Platforms
- Oil Drilling Rigs
- Oil, Gas Transmission
- Waste Treatment Facilities
- Airplane, Aerospace Facilities
- Electronics Manufacturing
- Pharmaceutical Plants
- Aircraft Manufacturing
- Vehicle Maintenance Facilities
- Grain Handling, Food Processing
- Coal Handling and Processing
- Flour, Sugar, Starch Processing
- Ammunition Manufacturing
- Coal, Gold and Copper Mining
- Pulp and Paper Manufacturing
- Copper, Aluminum Smelting
- Breweries, Malt Plants
- Shipyards, Shipbuilding Facilities
- Automobile Manufacturing
- Marine and Coastal Facilities
- Utility Power Plants
- Steel Mills, Foundries
- General Manufacturing Plants

Area Lighting — Hazlux® 3 Class I, Div 2

Fixtures for Class I, Division 2; Class II; Wet and Marine Locations

Features

- Modular fixture components enable hundreds of easy-to-assemble combinations
- Cast copper-free aluminum housings and mounting covers are lightweight and resist corrosion
- Electrostatically applied powder-coat finish for added corrosion resistance
- Thermal shock-resistant glass globes and refractors protect lamps in wet, marine and outdoor applications
- All glass globes and refractors are fully threaded and provide a dust-tight, watertight seal with silicone rubber gaskets
- Standard globe guards are made from rugged polycarbonate plastic or cast aluminum with keyhole slots for ease of installation and do not interfere with globe threads
- All exposed hardware is stainless steel for corrosion resistance and screws are slotted, hex-head style to further ease installation
- Comprehensive UL Listings for Class I, Division 2; Class I, Zone 2; and Class II
- Available for use with high-pressure sodium and metal halide lamps up to 400 watts
- Eight different mounting styles — rigid pendant, flexible pendant, cone pendant, ceiling, wall, 25° angle stanchion, straight stanchion and HazVertor® Adapter Ring
- Three ballast housing choices — standard tank, R-tank and large tank
- Heat sinks in ballast housings enable ballasts to operate cooler, provide longer life and improve temperature performance
- Bright white FRP (fiberglass-reinforced polyester) angle or dome reflectors resist corrosion while maximizing lighting effectiveness
- Many optical choices — standard globes, threaded refractor globes, 7¾" globes, 12" refractors, enclosed high-bay reflectors and more
- All mounting covers provided with dual-lead ground wire for connection to field and fixture grounds
- Optional HazCote® coating for extremely corrosive applications
- Optional stainless steel inserts for guard screws and ballast tank closure screw for enhanced corrosion resistance
- Optional Tuff-Skin® silicone coating on glass optics contains fragments if glass is broken (for food processing)
- Optional instant restrike starter for HPS lamps up to 150 watts restarts hot HPS lamp after momentary power failure

Materials and Finishes

- Ballast Housings — Copper-free aluminum, powder finish
- Mounting Covers — Copper-free aluminum, powder finish
- Guards — Polycarbonate, copper-free aluminum or steel
- Globes — Tempered glass or borosilicate glass
- Refractor Globes — Borosilicate glass
- Refractors (12") — Borosilicate glass
- Hardware — Stainless steel
- Reflectors — Fiberglass-reinforced polyester (standard dome, angle); anodized aluminum (deep dome, high bay enclosed)
- Gaskets — High-temperature silicone rubber

Certifications/Compliances

- UL® Listed (UL844) for:
  - Class I, Division 2, Groups A, B, C, D*
  - Class I, Zone 2, Groups IIA, IIB, IIC
  - Class II, Divisions 1 & 2, Groups E, F, G
  - Class III†
  - Wet locations
- UL® Listed (UL1598A) for:
  - Marine Locations
  - NEMA 4X, IP66
  - CSA Certified (Contact Hazlux)

** See **page I-3** for T-Code Rating.*

*† See **pages I-11–I-12** for ratings on specific wattages.*

Tuff-Skin is a registered trademark of Thomas Manufacturing Corp.

United States
Tel: 901.252.8000
800.816.7809
Fax: 901.252.1354

Technical Services
Tel: 888.862.3289

www.tnb.com

Area Lighting — Hazlux® 3 Class I, Div 2

Hazlux® 3 Certification Guide (40° C Ambient) Standard Ballast Housing, 5½" Thread

LAMP TYPE	WATTS	AMBIENT TEMP (DEG. C)	CLASS I, DIVISION 2 GROUPS A, B, C, D TEMPERATURE CODE		CLASS II DIVISION 1 & 2 GROUPS		UL 1598A MARINE	NEMA 4X*	SUPPLY WIRE TEMP. RATING (DEG. C)
			VGT/VGL22 5½" GLOBE, GUARD & REFLECTOR	VRF22C5 12" DIA. REFRACTOR	VGT/VGL22 5½" GLOBE, GUARD & REFLECTOR	VRF22C5 12" DIA. REFRACTOR			
High-Pressure Sodium	50	40	T3C	T4	EFG	EFG	Yes	Yes	90
	70	40	T3A	T3C	EFG	EFG	Yes	Yes	90
	100	40	T2C	T2D	EFG	EFG	Yes	Yes	90
	150	40	T2A	T2B	—	EFG	Yes	Yes	90
Metal Halide	70	40	T3C	T2C	EFG	EFG	Yes	Yes	90
	100	40	T3A	T2C	EFG	EFG	Yes	Yes	90
	175	40	T2A	T2C	—	EFG	Yes	Yes	90
	250	40	T2	T2	—	EFG	—	Yes	125

Notes: *1. Simultaneous presence applications: Some Hazlux® 3 fixtures are UL Listed for simultaneous presence of gas and dust. Contact Hazlux® for specific information.*

2. Tuff-Skin® Coated Optics: Many Hazlux® 3 fixtures are UL Listed with Tuff-Skin® (silicone) coating on glass optics. Contact Hazlux® for specific information.

3. For UL® and CSA Certification Information on other ambient temperatures and fixture configurations, consult the factory or refer to the Hazlux® Application Guide (Order Number: H7027).

Hazlux® 3 Certification Guide (40° C Ambient) R-Tank Ballast Housing, 7¾" Thread

LAMP TYPE	WATTS	AMBIENT TEMP (DEG. C)	CLASS I, DIVISION 2 GROUPS A, B, C, D TEMPERATURE CODE		CLASS II DIVISION 1 & 2 GROUPS		UL 1598A MARINE	NEMA 4X*	SUPPLY WIRE TEMP. RATING (DEG. C)
			VGT31S 7¾" GLOBE, GUARD & REFLECTOR	VGL31R5 7¾" DIA. REFRACTOR GLOBE	VGT31S 7¾" GLOBE, GUARD & REFLECTOR	VGL31R5 7¾" DIA. REFRACTOR GLOBE			
High-Pressure Sodium	50	40	T3C	T3C	EFG	EFG	Yes	Yes	90
	70	40	T3A	T3A	EFG	EFG	Yes	Yes	90
	100	40	T2D	T3	EFG	EFG	Yes	Yes	90
	150	40	T2B	T2B	EFG	EFG	Yes	Yes	90
Metal Halide	70	40	T3	T3	EFG	EFG	Yes	Yes	90
	100	40	T3	T3	EFG	EFG	Yes	Yes	90
	175	40	T2B	T2B	EFG	EFG	Yes	Yes	90
	250	25	T2	T2	EF	EFG	—	Yes	90

Notes: *1. Simultaneous presence applications: Many Hazlux® 3 fixtures are UL® Listed for simultaneous presence of gas and dust. Contact Hazlux® for specific information.*

2. Tuff-Skin® Coated Optics: Many Hazlux® 3 fixtures are UL® Listed with Tuff-Skin® (silicone) coating on glass optics. Contact Hazlux® for specific information.

3. For UL® and CSA Certification Information on other ambient temperatures and fixture configurations, consult the factory or refer to the Hazlux® Application Guide (Order Number: H7027).

** All Hazlux® fixture assemblies shown in this Buyers Guide as UL® Listed or CSA Certified for marine applications are suitable for hosedown when fixture is off and glass has been allowed to cool. Tempered glass globes and refractors have better thermal-resistance properties than non-tempered globes and refractors and should be considered whenever fixtures are subject to being splashed with significantly cooler liquids while illuminated (hot). Consult factory for more information.*

Tuff-Skin is a registered trademark of Thomas Manufacturing Corp.

Area Lighting — Hazlux® 3 Class I, Div 2

Hazlux® 3 Certification Guide (40° C Ambient) Large Ballast Housing, 7¾" Thread

LAMP TYPE	WATTS	AMBIENT TEMP (DEG. C)	CLASS I, DIVISION 2 GROUPS A, B, C, D TEMPERATURE CODE: VGT31 GLOBE WITH GUARD & REFLECTOR	VRF31C5 12" DIA. REFRACTOR	REFLECTOR WITH LENS	CLASS II DIVISION 1 & 2 GROUPS: VGT31 GLOBE WITH GUARD & REFLECTOR	VRF31C5 12" DIA. REFRACTOR	REFLECTOR WITH LENS	UL 1598A MARINE	NEMA 4X*	SUPPLY WIRE TEMP. RATING (DEG. C)
High-Pressure Sodium	200	40	T2	T2A	T2A	EF	EFG	EFG	Yes	Yes	90
	250	40	325° C	325° C	325° C	EF	EFG	EFG	Yes	Yes	90
	400	40	T2A	T2B	T2B	—	EFG	EF	—	Yes	110
Metal Halide	250	40	T2	T2A	T2A	—	EFG	EFG	—	Yes	90
	400	40	350° C	325° C	325° C	—	EFG	EF	—	Yes	110

Notes: *1. 400-Watt HPS T-numbers based on BT/E/ED 37 diffuse coated lamp. Contact Hazlux® for certification information when using other lamps.*

2. Simultaneous presence applications: Some Hazlux® 3 fixtures are UL® Listed for simultaneous presence of gas and dust. Contact Hazlux® for specific information.

3. Tuff-Skin® Coated Optics: Many Hazlux® 3 fixtures are UL® Listed with Tuff-Skin® (silicone) coating on glass optics. Contact Hazlux® for specific information.

4. For UL® and CSA Certification Information on other ambient temperatures and fixture configurations, consult the factory or refer to the Hazlux® Application Guide (Order Number: H7027).

Hazlite® M3 Certification Guide (40° C Ambient)

The data listed in the table below is for UL844/1598A listing at 40° C ambient.

FIXTURE TYPE	WATTS	SERIES	CLASS 1, DIVISION 2 GROUPS A, B, C, D TEMPERATURE CODE: GLOBE & GUARD WITH OR WITHOUT REFLECTOR	8" REFRACTOR	CLASS II DIVISION 1 & 2 GROUPS: GLOBE & GUARD WITH OR WITHOUT REFLECTOR	8" REFRACTOR	CLASS III DIVISION 1 & 2: GLOBE & GUARD WITH OR WITHOUT REFLECTOR	8" REFRACTOR	NEMA 4X (SUITABLE FOR HOSEDOWN)*	MARINE LISTED (UL 1598A)*
High-Pressure Sodium	35	DSM	T3A	T3A	EF&G	EF&G	Yes	Yes	Yes	Yes
	50	DSM	T3	T3	EF&G	EF&G	Yes	Yes	Yes	Yes
	70	DSM	T2B	T2B	EF&G	EF&G	Yes	Yes	Yes	Yes
	100	DSM	T2A	T2A	E&F	EF&G	—	Yes	Yes	Yes
	150	DSM	325° C	325° C	E&F	EF&G	—	Yes	Yes	—
Fluorescent	9	DFB	T3C	T3C	EF&G	EF&G	Yes	Yes	Yes	Yes
	13	DFB	T3C	T3C	EF&G	EF&G	Yes	Yes	Yes	Yes
	18	DFB	T3C	T3C	EF&G	EF&G	Yes	Yes	Yes	Yes
	26	DFB	T3	T3	EF&G	EF&G	Yes	Yes	Yes	Yes
Incandescent	60	DIM	T3	T3	E&F	EF&G	—	Yes	Yes	Yes
	100	DIM	T3	T3	E&F	EF&G	—	Yes	Yes	Yes
	150	DIM	T2B	T2B	—	EF&G	—	Yes	Yes	Yes

** All Hazlux® fixture assemblies shown in this Buyers Guide as UL® Listed or CSA Certified for marine applications are suitable for hosedown when fixture is off and glass has been allowed to cool. Tempered glass globes and refractors have better thermal-resistance properties than non-tempered globes and refractors and should be considered whenever fixtures are subject to being splashed with significantly cooler liquids while illuminated (hot). Consult factory for more information.*

Tuff-Skin is a registered trademark of Thomas Manufacturing Corp.

United States
Tel: 901.252.8000
800.816.7809
Fax: 901.252.1354

Technical Services
Tel: 888.862.3289

www.tnb.com

Area Lighting — Hazlux® 3 Class I, Div 2

Hazlux® 3 Standard Housing Fixture Assembly Guide

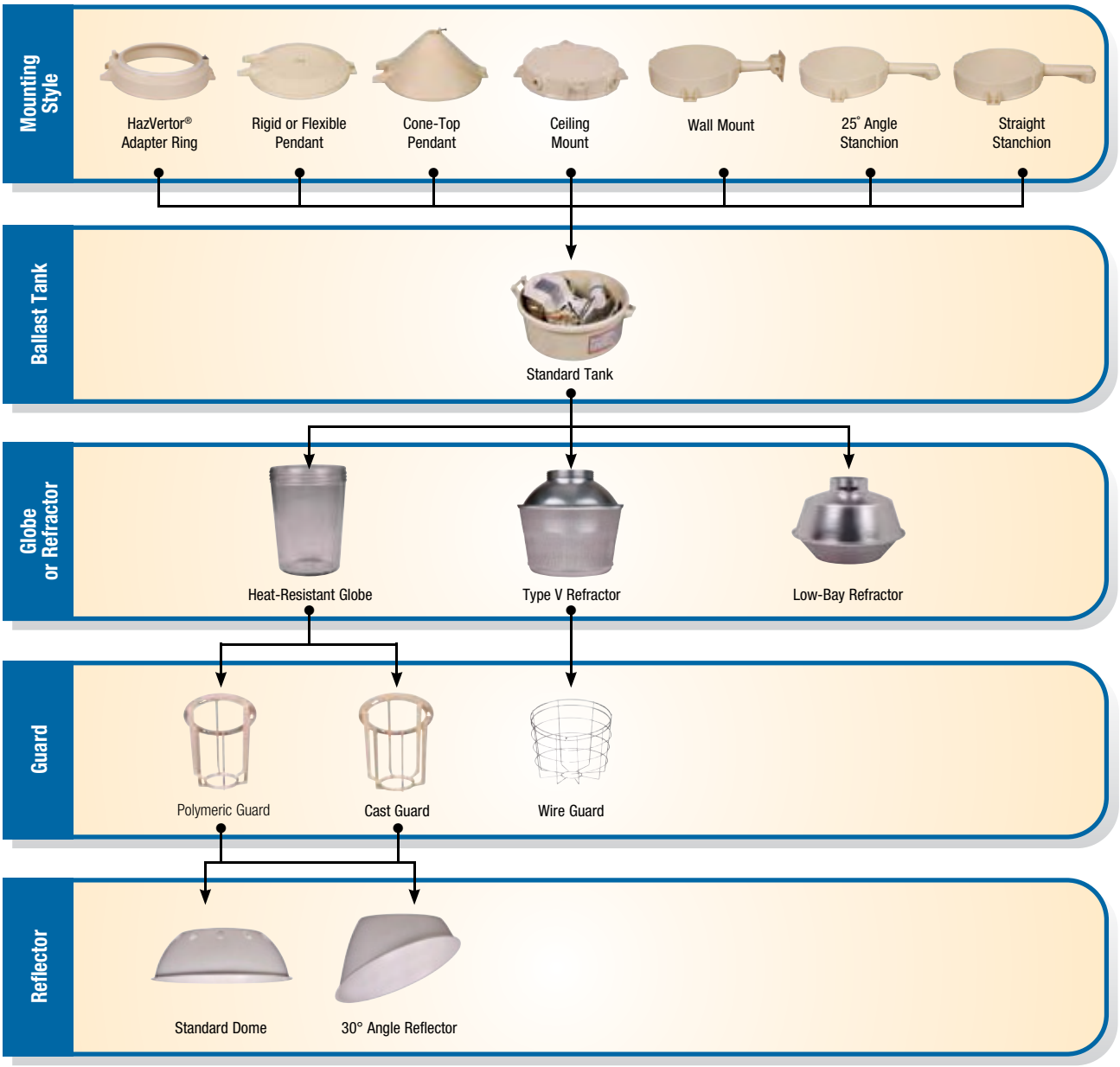

Area Lighting — Hazlux® 3 Class I, Div 2

Hazlux® 3 Standard Housing Fixture Catalog Numbering System

Class I — Zone 2, Groups IIC, IIB, IIA
— Division 2, Groups A, B, C and D
Class II — Division 1 and 2, Groups E, F and G
Class III
- UL® Listed (UL1598A) for Marine Locations
- UL844
- NEMA 4X, IP66

Contact your Thomas & Betts sales representative to verify classification.

D	S	Ø	15	H	04	0	-	TGL	-	P2	E1	F
1	2	3	4	5	6	7		8		9	11	12

1 Fixture Series
- **D =** Hazlux® 3 Fixture

2 Lamp Type
- **S =** High-Pressure Sodium
- **H =** Metal Halide
- **C =** 150-Watt HPS 100V Only

3 Starter Circuit/Quartz Options
- **Ø =** Standard Fixture (Without Options)
- **P =** Pulse Start (MH Only)
- **Q =** Quartz Auxiliary Option (Not Hazardous Rated)
- **R =** Instant Restart
- **J =** Auto Shutoff Starter (HPS Only)
- **Y =** Auto Shutoff Starter with Quartz Restrike (HPS only, non-UL)

4 Lamp Wattage
- **05 =** 50 Watts
- **07 =** 70 Watts
- **10 =** 100 Watts
- **15 =** 150 Watts
- **17 =** 175 Watts
- **20 =** 200 Watts
- **25 =** 250 Watts

5 Ballast Circuit
- **H =** High Reactance
- **C =** Constant Wattage Autotransformer (CWA)
- **I =** CWI
- **P =** Reactor

(All ballasts high power factor)

6 Voltage/Frequency
- **03 =** 120/277V, 60 Hz
- **04 =** 120/208/240/277V, 60 Hz
- **09 =** 120/277/347V, 60 Hz (CSA)
- **12 =** 120V, 60 Hz
- **24 =** 240V, 60 Hz
- **27 =** 277V, 60 Hz
- **28 =** 208V, 60 Hz
- **34 =** 347V, 60 Hz
- **48 =** 480V, 60 Hz
- **225 =** 220V, 50 Hz
- **245 =** 240V, 50 Hz

7 Ballast Housing Style
- **Ø =** Standard Housing (150W HPS, 250W MH)
- **S =** Standard Housing with Stainless Steel Inserts

8 Optical Assembly Options
- **TG =** Thermal Shock-Resistant Globe
- **TGL =** Thermal Shock-Resistant Globe with Polymeric Guard
- **SG =** Tuff-Skin® Coated Globe
- **SGL =** Tuff-Skin® Coated Globe with Polymeric Guard
- **R5 =** 12-in. Glass Refractor, Type V
- **R5G =** 12-in. Glass Refractor, Type V with Wire Guard
- **TGC =** Thermal Shock-Resistant Globe with Cast Guard
- **SGC =** Tuff-Skin® Coated Globe with Cast Guard
- **CBDL =** Closed Bottom Refractor with Polycarbonate Lens (Non-UL)

9 Mounting Style
- **A2 =** ¾" Cone-Top Pendant
- **A3 =** 1" Cone-Top Pendant
- **B2 =** ¾" Wall Mount
- **B3 =** 1" Wall Mount
- **C2 =** ¾" Ceiling Mount
- **C3 =** 1" Ceiling Mount
- **F2 =** ¾" Flexible Pendant
- **F3 =** 1" Flexible Pendant
- **HV1 =** HazVertor® Ring — Class I, Div. 2, Zone 2
- **L4 =** 1¼" Straight Stanchion
- **L5 =** 1½" Straight Stanchion
- **P2 =** ¾" Rigid Pendant
- **P3 =** 1" Rigid Pendant
- **S4 =** 1¼" 25° Angle Stanchion
- **S5 =** 1½" 25° Angle Stanchion

10 Special Options
- **T =** HazCote® Custom Corrosion Coating (Consult Factory)
- **G =** Gray Color Option

11 UNIPAK® Options
- **E =** UNIPAK® with Clear Lamp
- **E1 =** UNIPAK®, Clear Lamp, Dome Reflector
- **E2 =** UNIPAK®, Clear Lamp, Angle Reflector
- **D =** UNIPAK® with Dual Arc Lamp
- **D1 =** UNIPAK®, Dual-Arc Lamp, Dome Reflector
- **D2 =** UNIPAK®, Dual-Arc Lamp, Angle Reflector
- **U =** UNIPAK®, No Lamp

12 Fusing Options
- **F =** Fuse Block(s) with Fuse(s)

13 CSA Certification
- **C =** CSA Nameplate

Tuff-Skin is a registered trademark of Thomas Manufacturing Corp.

United States
Tel: 901.252.8000
800.816.7809
Fax: 901.252.1354

Technical Services
Tel: 888.862.3289

www.tnb.com

Area Lighting — Hazlux® 3 Class I, Div 2

Mounting Options

Rigid Pendant

Wall Mount

Wall Mount for High Vibration Applications

Cone-Top Pendant

25° Angle Stanchion

Flexible Pendant

25° Angle Stanchion for High Vibration Applications

Ceiling Mount

Straight Stanchion

HazVertor® Adapter Ring

Straight Stanchion for High Vibration Applications

CAT. NO.	DESCRIPTION	CONDUIT HUB SIZE
VP2	Rigid Pendant	¾"
VP3		1"
VA2	Cone-Top Pendant	¾"
VA3		1"
VF2	Flexible Pendant	¾"
VF3		1"
VC2	Ceiling Mount	¾"
VC3		1"
VB2	Wall Mount	¾"
VB3		1"
VB2-VIB	Wall Mount for High Vibration Applications	¾"
VB3-VIB		1"
VS4	25° Angle Stanchion	1¼"
VS5		1½"
VS4-VIB	25° Angle Stanchion for High Vibration Applications	1¼"
VS5-VIB		1½"
VL4	Straight Stanchion	1¼"
VL5		1½"
VL4-VIB	Straight Stanchion for High Vibration Applications	1¼"
VL5-VIB		1½"
HV1	HazVertor Adapter Ring	N/A

Globes or Refractors

Heat-Resistant Globe

Type V Refractor

Low-Bay Refractor

CAT. NO.	DESCRIPTION
VGT22	5½"-dia. Heat-Resistant Globe (250W max.)
VGT22TS	5½"-dia. Heat-Resistant Globe (250W max.) Coated with Tuff-Skin®
VRF22C5	12"-dia. IES Type V Refractor, 5½" thread
VR22CBDL	Low-Bay Refractor with Plastic Lens (Non-UL)

Reflectors or Exit Sign

30° Angle Reflector

Three-Sided Exit Sign

Standard Dome

CAT. NO.	DESCRIPTION
VR22P	Standard Dome, Fiberglass-Reinforced Polyester
VRA22P	30° Angle Reflector, Fiberglass-Reinforced Polyester
VRE22	Three-Sided Exit Sign

Guards

Polymeric Guard

Cast Guard

Wire Guard

CAT. NO.	DESCRIPTION
VGU22P	Polymeric Guard for VGT22 Series Globe
VGU22	Cast Guard for VGT22 Series Globe
VGR48	Steel Wire Guard for All VRF Series 12" Refractors

Tuff-Skin is a registered trademark of Thomas Manufacturing Corp.

Area Lighting — Hazlux® 3 Class I, Div 2

Dimensions — Standard Ballast Housing with Globe and Guard

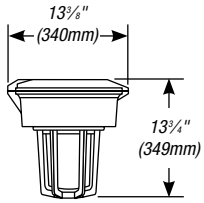

Rigid Pendant

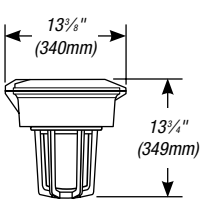

Flexible Pendant

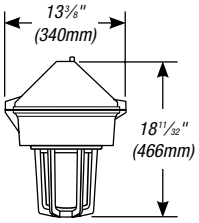

Cone-Top Pendant

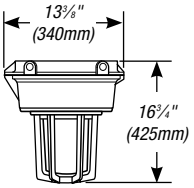

Ceiling Mount

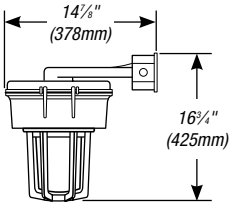

Wall Mount

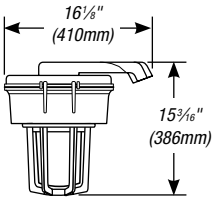

25° Angle Stanchion Mount

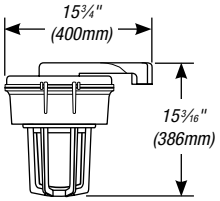

Straight Stanchion

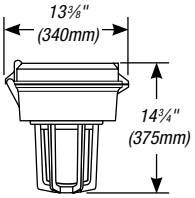

HazVertor® Ring

Dimensions — Standard Ballast Housing with 12" Refractor and Guard

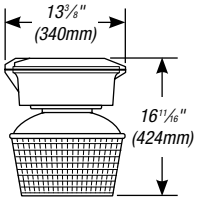

Rigid Pendant

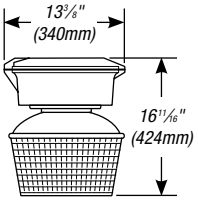

Flexible Pendant

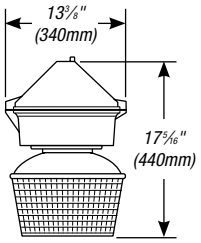

Cone-Top Pendant

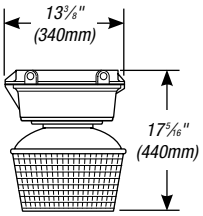

Ceiling Mount

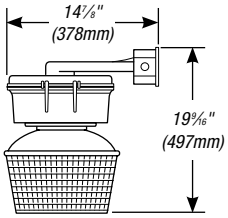

Wall Mount

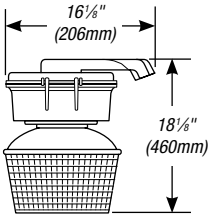

25° Angle Stanchion Mount

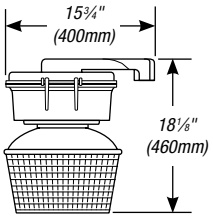

Straight Stanchion

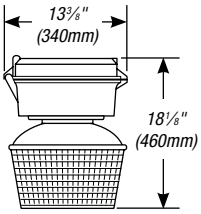

HazVertor® Ring

Class I — Zone 2, Groups IIC, IIB, IIA
— Division 2, Groups A, B, C and D
Class II — Division 1 and 2, Groups E, F and G
Class III

- UL® Listed (UL1598A) for Marine Locations
- UL844
- NEMA 4X, IP66

Contact your Thomas & Betts sales representative to verify classification.

Area Lighting — Hazlux® 3 Class I, Div 2

Hazlux® 3 Refractor Globe Housing Fixture Assembly Guide

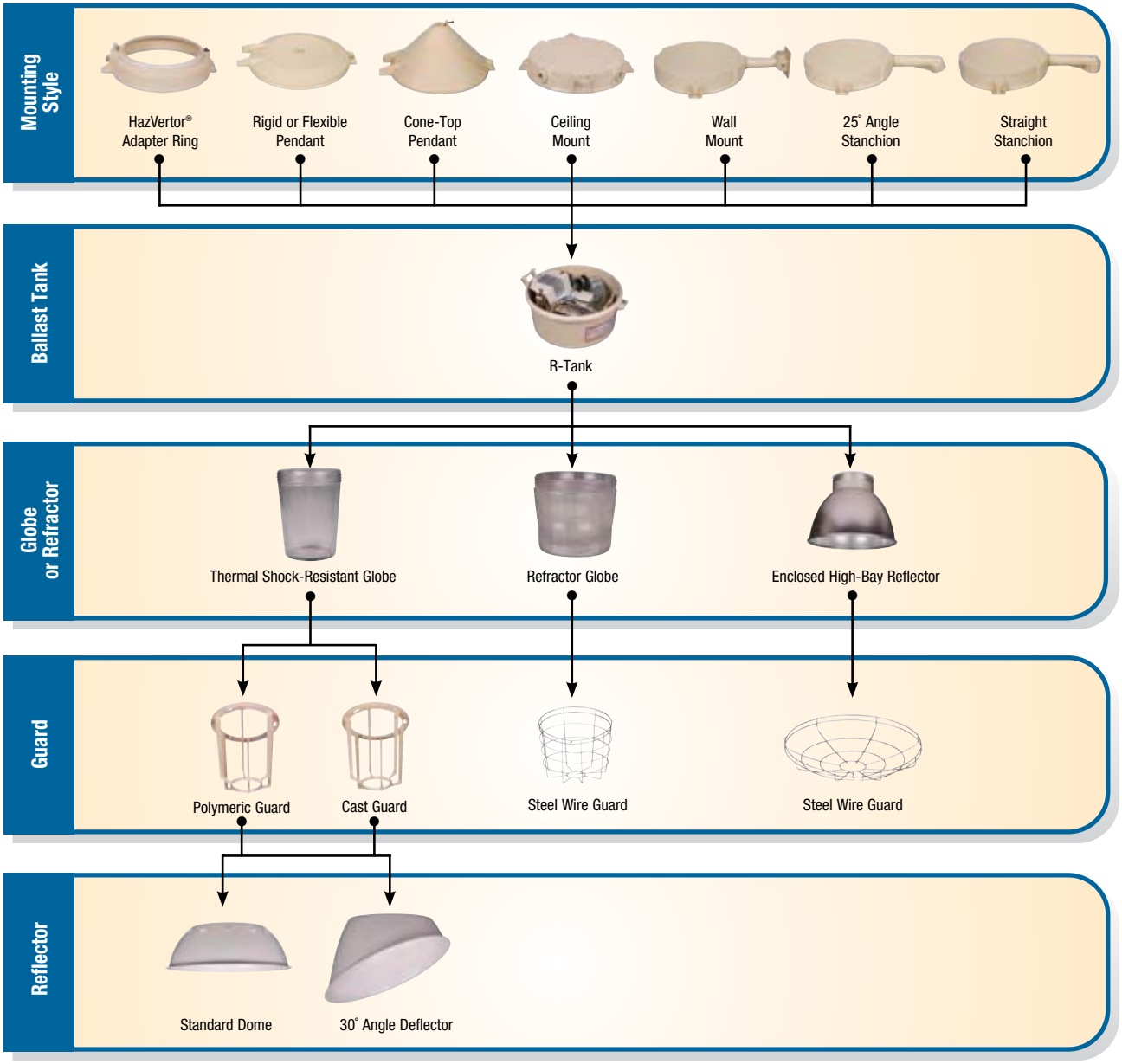

Area Lighting — Hazlux 3® Class I, Div 2

Hazlux® 3 Refractor Globe Housing Fixture Catalog Numbering System

Class I — Zone 2, Groups IIC, IIB, IIA
— Division 2, Groups A, B, C and D
Class II — Division 1 and 2, Groups E, F and G
Class III

- UL® Listed (UL1598A) for Marine Locations
- UL844
- NEMA 4X, IP66

Contact your Thomas & Betts sales representative to verify classification.

D	S	Ø	15	H	04	R	-	TGP	-	P2	E1	F
1	2	3	4	5	6	7		8		9	11	12

1 Fixture Series
- **D =** Hazlux® 3 Fixture

2 Lamp Type
- **S =** High-Pressure Sodium
- **H =** Metal Halide
- **C =** 150-Watt HPS 100V Only

3 Starter Circuit/Quartz Options
- **Ø =** Standard Fixture (Without Options)
- **P =** Pulse Start (MH Only)
- **Q =** Quartz Auxiliary Option (Not Hazardous Rated)
- **R =** Instant Restart
- **J =** Auto Shutoff Starter (HPS Only)
- **Y =** Auto Shutoff Starter with Quartz Restrike (HPS only, non-UL)

4 Lamp Wattage
- **05 =** 50 Watts
- **07 =** 70 Watts
- **10 =** 100 Watts
- **15 =** 150 Watts
- **17 =** 175 Watts
- **25 =** 250 Watts

5 Ballast Circuit
- **H =** High Reactance
- **C =** Constant Wattage Autotransformer (CWA)
- **I =** CWI
- **P =** Reactor (All ballasts high power factor)

6 Voltage/Frequency
- **03 =** 120/277V, 60 Hz
- **04 =** 120/208/240/277V, 60 Hz
- **09 =** 120/277/347V, 60 Hz (CSA)
- **12 =** 120V, 60 Hz
- **24 =** 240V, 60 Hz
- **27 =** 277V, 60 Hz
- **28 =** 208V, 60 Hz
- **34 =** 347V, 60 Hz
- **48 =** 480V, 60 Hz
- **225 =** 220V, 50 Hz
- **245 =** 240V, 50 Hz

7 Ballast Housing Style
- **R =** Refractor Globe Housing
- **I =** Refractor Globe Housing with Stainless Steel Inserts

8 Optical Assembly Options
- **R1 =** 7¾" Refractor Globe, Type I
- **R3 =** 7¾" Refractor Globe, Type III
- **R5 =** 7¾" Refractor Globe, Type V
- **R1P =** R1 with Polymeric Guard
- **R3P =** R3 with Polymeric Guard
- **R5P =** R5 with Polymeric Guard
- **R1G =** R1 with Cast Guard
- **R3G =** R3 with Cast Guard
- **R5G =** R5 with Cast Guard
- **TG =** 7¾" Thermal Shock-Resistant CBDL Globe
- **TGP =** TG with Polymeric Guard
- **TGC =** TG with Cast Guard
- **RCB =** Enclosed High-Bay Reflector
- **RCG =** RCB with Steel Wire Guard

9 Mounting Style
- **A2 =** ¾" Cone-Top Pendant
- **A3 =** 1" Cone-Top Pendant
- **B2 =** ¾" Wall Mount
- **B3 =** 1" Wall Mount
- **C2 =** ¾" Ceiling Mount
- **C3 =** 1" Ceiling Mount
- **F2 =** ¾" Flexible Pendant
- **F3 =** 1" Flexible Pendant
- **HV1 =** HazVertor® Ring — Class I, Div. 2, Zone 2
- **L4 =** 1¼" Straight Stanchion
- **L5 =** 1½" Straight Stanchion
- **P2 =** ¾" Rigid Pendant
- **P3 =** 1" Rigid Pendant
- **S4 =** 1¼" 25° Angle Stanchion
- **S5 =** 1½" 25° Angle Stanchion

10 Special Options
- **T =** HazCote® Custom Corrosion Coating (Consult Factory)
- **G =** Gray Color Option

11 UNIPAK® Options
- **E =** UNIPAK® with Clear Lamp
- **E1 =** UNIPAK®, Clear Lamp, Dome Reflector
- **E2 =** UNIPAK®, Clear Lamp, Angle Reflector
- **D =** UNIPAK® with Dual Arc Lamp
- **D1 =** UNIPAK®, Dual-Arc Lamp, Dome Reflector
- **D2 =** UNIPAK®, Dual-Arc Lamp, Angle Reflector
- **U =** UNIPAK®, No Lamp

12 Fusing Options
- **F =** Fuse Block(s) with Fuse(s)

13 CSA Certification
- **C =** CSA Nameplate

Area Lighting — Hazlux® 3 Class I, Div 2

Mounting Options

Rigid Pendant

Wall Mount

Wall Mount for High Vibration Applications

Cone-Top Pendant

25° Angle Stanchion

Flexible Pendant

25° Angle Stanchion for High Vibration Applications

Ceiling Mount

Straight Stanchion

Straight Stanchion for High Vibration Applications

HazVertor® Adapter Ring

CAT. NO.	DESCRIPTION	CONDUIT HUB SIZE
VP2	Rigid Pendant	¾"
VP3		1"
VA2	Cone-Top Pendant	¾"
VA3		1"
VF2	Flexible Pendant	¾"
VF3		1"
VC2	Ceiling Mount	¾"
VC3		1"
VB2	Wall Mount	¾"
VB3		1"
VB2-VIB	Wall Mount for High	¾"
VB3-VIB	Vibration Applications	1"
VS4	25° Angle Stanchion	1¼"
VS5		1½"
VS4-VIB	25° Angle Stanchion for High	1¼"
VS5-VIB	Vibration Applications	1½"
VL4	Straight Stanchion	1¼"
VL5		1½"
VL4-VIB	Straight Stanchion for High	1¼"
VL5-VIB	Vibration Applications	1½"
HV1	HazVertor® Adapter Ring	N/A

Globes or Refractors

Heat-Resistant Globe

Type I, III or V Refractor Globe

Type V Refractor

CAT. NO.	DESCRIPTION
VGT31S	7¾" dia. Heat-Resistant Globe (250W max.)
VGT31STS	7¾" dia. Heat-Resistant Globe (250W max.) coated with Tuff-Skin®
VGL31R1	7¾" dia. IES Type I Refractor Globe (250W max.)
VGL31R3	7¾" dia. IES Type III Refractor Globe (250W max.)
VGL31R5	7¾" dia. IES Type V Refractor Globe (250W max.)
VRF31C5	12" dia. IES Type V Refractor, 7¾" thread

Reflectors

Standard Dome

Deep Dome

Enclosed High-Bay Reflector

30° Angle Reflector

CAT. NO.	DESCRIPTION
VR31P	Standard Dome, Fiberglass-Reinforced Polyester
VRD31	Deep Dome, Anodized Aluminum
VR31CB	Enclosed High-Bay, Anodized Aluminum with Lens
VRA31P	30° Angle Reflector, Fiberglass-Reinforced Polyester

Guards

Polymeric Guard

Cast Guard

VGR48 Wire Guard

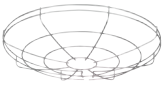
VGR64 Wire Guard

Tuff-Skin is a registered trademark of Thomas Manufacturing Corp.

CAT. NO.	DESCRIPTION
VGU31RP	Polymeric Guard for VGT31S Globe and VGL31R Series Refractor Globes
VGU31R	Cast Aluminum Guard for VGT31S Globe and VGL31R Series Refractor Globes
VGR48	Steel Wire Guard for All VRF Series 12" Refractors
VGR64	Steel Wire Guard for VR31CB Enclosed High Bay Reflector

Area Lighting — Hazlux® 3 Class I, Div 2

Dimensions — R-Tank Housing with 7¾" Refractor and Guard

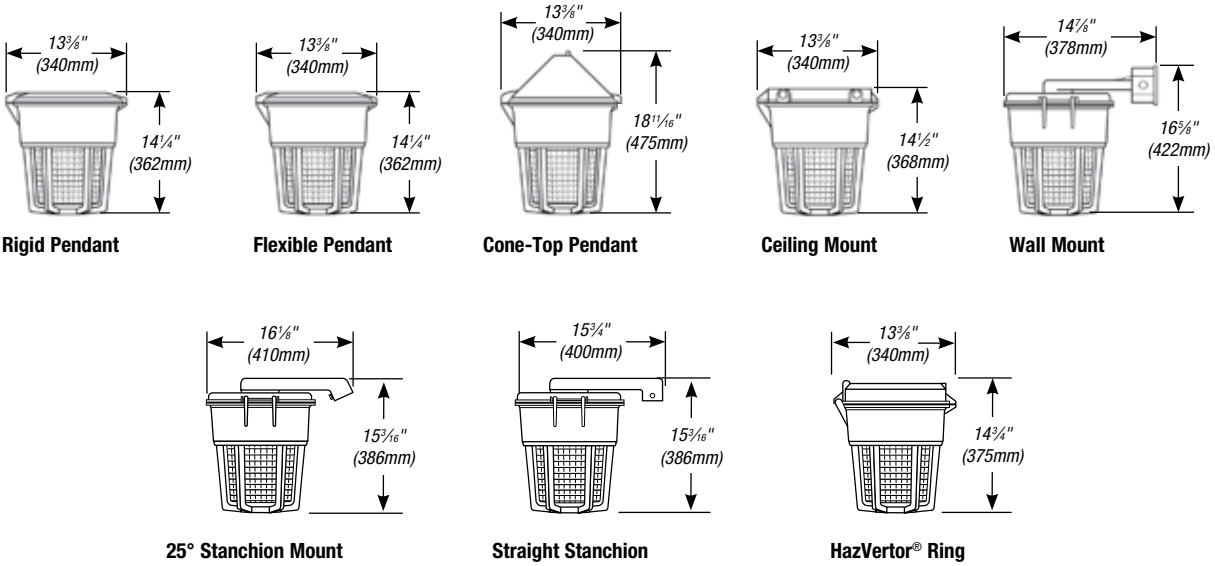

Dimensions — R-Tank Housing with 7¾" Globe and Guard

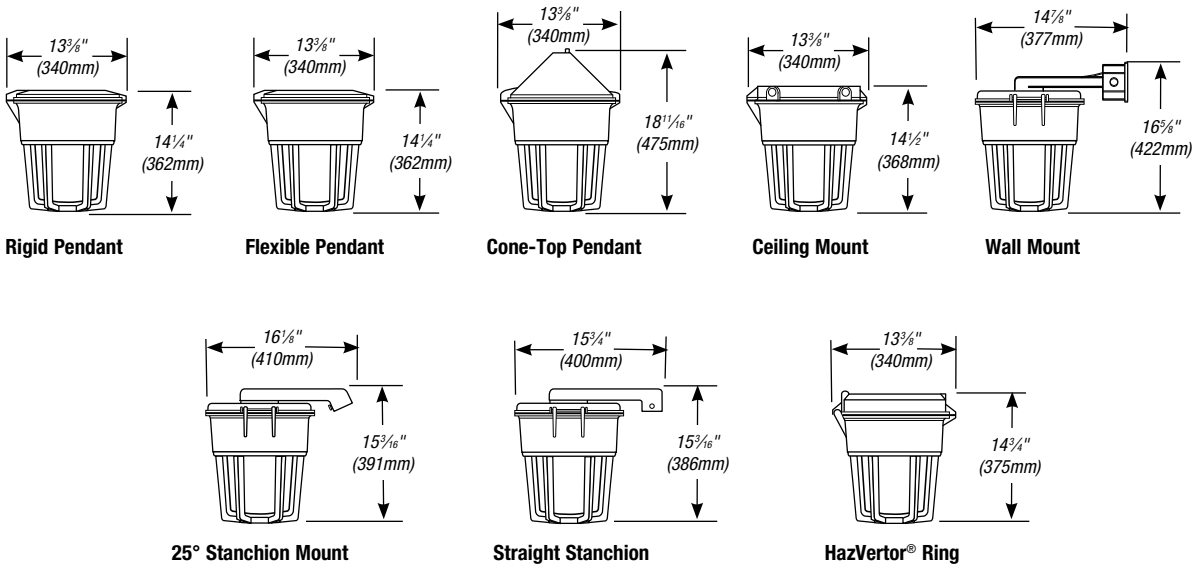

Class I — Zone 2, Groups IIC, IIB, IIA
— Division 2, Groups A, B, C and D
Class II — Division 1 and 2, Groups E, F and G

Class III
- UL® Listed (UL1598A) for Marine Locations
- UL844
- NEMA 4X, IP66

Contact your Thomas & Betts sales representative to verify classification.

United States
Tel: 901.252.8000
800.816.7809
Fax: 901.252.1354

Technical Services
Tel: 888.862.3289

www.tnb.com

Area Lighting — Hazlux® 3 Class I, Div 2

Hazlux® 3 Large Housing Fixture Assembly Guide

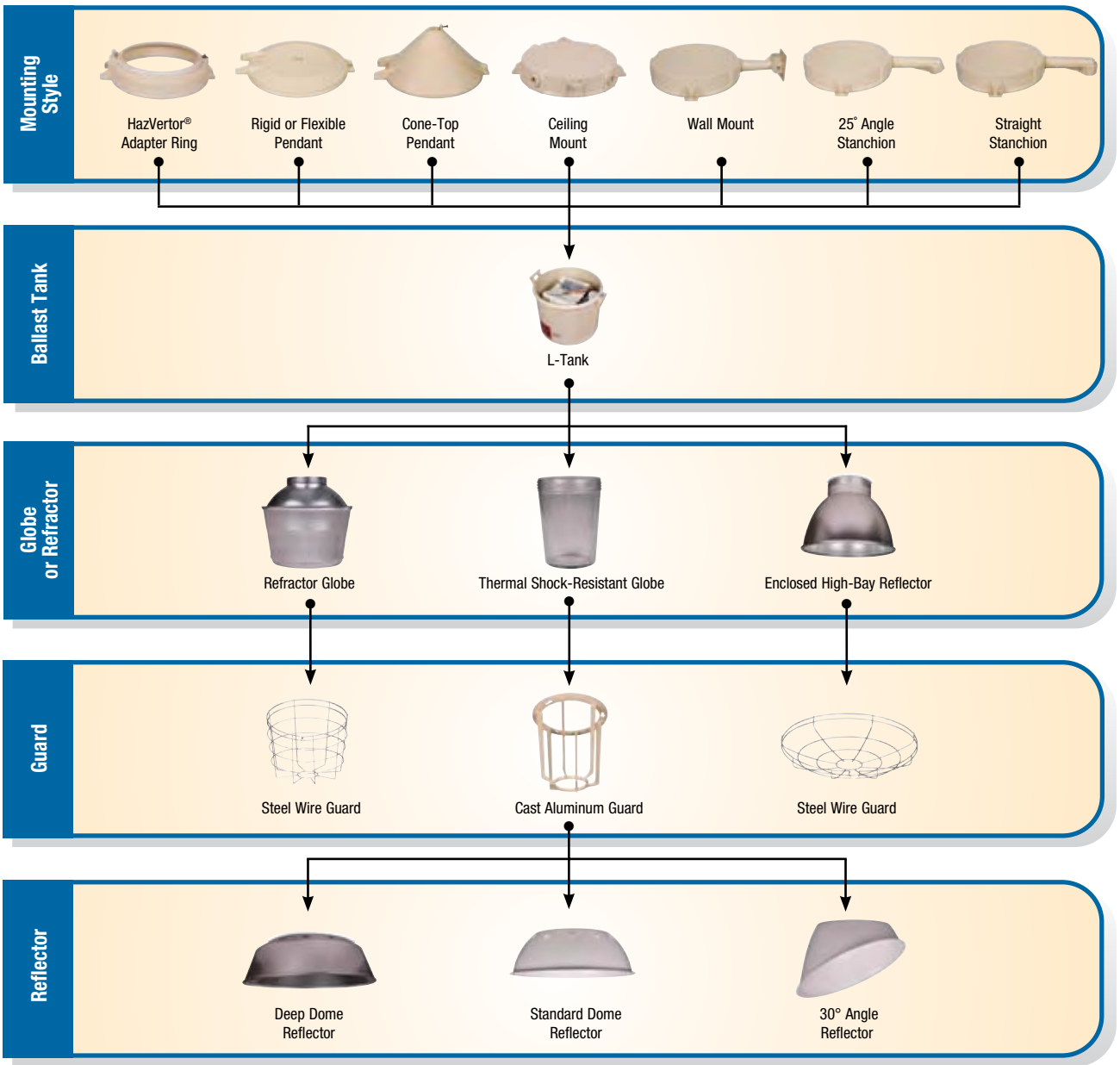

www.tnb.com

United States
Tel: 901.252.8000
800.816.7809
Fax: 901.252.1354

Technical Services
Tel: 888.862.3289

Thomas&Betts

Area Lighting — Hazlux® 3 Class I, Div 2

Hazlux® 3 Large Housing Fixture Catalog Numbering System

D	S	Ø	25	H	04	L	-	TGC	-	P2	E1	F
1	2	3	4	5	6	7		8		9	11	12

1 Fixture Series
- **D =** Hazlux® 3 Fixture

2 Lamp Type
- **S =** High-Pressure Sodium
- **H =** Metal Halide

3 Starter Circuit/Quartz Options
- **Ø =** Standard Fixture (Without Options)
- **P =** Pulse Start (MH Only)
- **Q =** Quartz Auxiliary Option (Not Hazardous Rated)
- **J =** Auto Shutoff Starter (HPS Only)
- **Y =** Auto Shutoff Starter with Quartz Restrike (HPS only, non-UL)

4 Lamp Wattage
- **20 =** 200 Watts
- **25 =** 250 Watts (HPS only)
- **32 =** 320 Watts (Metal Halide only)
- **35 =** 350 Watts (Metal Halide only)
- **40 =** 400 Watts

5 Ballast Circuit
- **H =** High Reactance
- **C =** Constant Wattage Autotransformer
- **I =** CWI
- **P =** Reactor

(All ballast high power factor)

6 Voltage/Frequency
- **03 =** 120/277V, 60 Hz
- **04 =** 120/208/240/277V, 60 Hz
- **09 =** 120/277/347V, 60 Hz (CSA)
- **12 =** 120V, 60 Hz
- **27 =** 277V, 60 Hz
- **28 =** 208V, 60 Hz
- **34 =** 347V, 60 Hz
- **48 =** 480V, 60 Hz
- **225 =** 220V, 50 Hz
- **245 =** 240V, 50 Hz

7 Ballast Housing Style
- **L =** Large Housing
- **M =** Large Housing with Stainless Steel Inserts

8 Optics and Guards
- **R5 =** 7¾" Refractor Globe, Type V
- **R5G =** R5 with Steel Wire Guard

Tuff-Skin® is a trademark of Thomas Manufacturing Corp.

8 Optics and Guards *(continued)*
- **RCB =** Enclosed High-Bay Reflector
- **RCG =** RCB with Steel Wire Guard
- **TG =** 7¾" Thermal Shock-Resistant CBDL Globe
- **TGC =** TG with Cast Aluminum Guard
- **SG =** Tuff-Skin® Coated Globe
- **SGC =** SG with Cast Aluminum Guard

9 Mounting Style
- **A2 =** ¾" Cone-Top Pendant
- **A3 =** 1" Cone-Top Pendant
- **B2 =** ¾" Wall Mount
- **B3 =** 1" Wall Mount
- **C2 =** ¾" Ceiling Mount
- **C3 =** 1" Ceiling Mount
- **F2 =** ¾" Flexible Pendant
- **F3 =** 1" Flexible Pendant
- **HV1 =** HazVertor® Ring — Class I, Div. 2, Zone 2
- **L4 =** 1¼" Straight Stanchion
- **L5 =** 1½" Straight Stanchion
- **P2 =** ¾" Rigid Pendant
- **P3 =** 1" Rigid Pendant
- **S4 =** 1¼" 25° Angle Stanchion
- **S5 =** 1½" 25° Angle Stanchion

10 Special Options
- **T =** HazCote® Custom Corrosion Coating (Consult Factory)
- **G =** Gray Color Option

11 UNIPAK® Options
- **E =** UNIPAK® with Clear Lamp
- **E1 =** UNIPAK®, Clear Lamp, Dome Reflector
- **E2 =** UNIPAK®, Clear Lamp, Angle Reflector
- **D =** UNIPAK® with Dual Arc Lamp
- **D1 =** UNIPAK®, Dual-Arc Lamp, Dome Reflector
- **D2 =** UNIPAK®, Dual-Arc Lamp, Angle Reflector
- **U =** UNIPAK®, No Lamp

12 Fusing Options
- **F =** Fuse Blocks with Fuses

13 CSA Certification
- **C =** CSA Nameplate

Class I — Zone 2, Groups IIC, IIB, IIA
— Division 2, Groups A, B, C and D
Class II — Division 1 and 2, Groups E, F and G
Class III
- UL® Listed (UL1598A) for Marine Locations
- UL844
- NEMA 4X, IP66

Contact your Thomas & Betts sales representative to verify classification.

Thomas&Betts

United States
Tel: 901.252.8000
800.816.7809
Fax: 901.252.1354

Technical Services
Tel: 888.862.3289

www.tnb.com

Area Lighting — Hazlux® 3 Class I, Div 2

Mounting Options

Rigid Pendant

Wall Mount

Wall Mount for High Vibration Applications

Cone-Top Pendant

25° Angle Stanchion

Flexible Pendant

25° Angle Stanchion for High Vibration Applications

Ceiling Mount

Straight Stanchion

HazVertor® Adapter Ring

Straight Stanchion for High Vibration Applications

CAT. NO.	DESCRIPTION	CONDUIT HUB SIZE
VP2	Rigid Pendant	¾"
VP3		1"
VA2	Cone-Top Pendant	¾"
VA3		1"
VF2	Flexible Pendant	¾"
VF3		1"
VC2	Ceiling Mount	¾"
VC3		1"
VB2	Wall Mount	¾"
VB3		1"
VB2-VIB	Wall Mount for High	¾"
VB3-VIB	Vibration Applications	1"
VS4	25° Angle Stanchion	1¼"
VS5		1½"
VS4-VIB	25° Angle Stanchion for High	1¼"
VS5-VIB	Vibration Applications	1½"
VL4	Straight Stanchion	1¼"
VL5		1½"
VL4-VIB	Straight Stanchion for High	1¼"
VL5-VIB	Vibration Applications	1½"
HV1	HazVertor® Adapter Ring	N/A

Globes or Refractors

Heat-Resistant Globe

Type V Refractor

CAT. NO.	DESCRIPTION
VGT31	7¾" dia. Heat-Resistant Globe (400W max.)
VGT31TS	7¾" dia. Heat-Resistant Globe (400W max.) coated with Tuff-Skin®
VRF31C5	12" dia. IES Type V Refractor, 7¾" Thread

Reflectors

Standard Dome

Deep Dome

Enclosed High-Bay Reflector

30° Angle Reflector

CAT. NO.	DESCRIPTION
VR31P	Standard Dome, Fiberglass-Reinforced Polyester
VRD31	Deep Dome, Anodized Aluminum
VR31CB	Enclosed High-Bay, Anodized Aluminum with Lens
VRA31P	30° Angle Reflector, Fiberglass-Reinforced Polyester

Guards

Cast Guard

Wire Guard

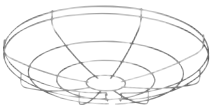
Wire Guard for High-Bay Reflector

CAT. NO.	DESCRIPTION
VGU31	Cast Aluminum Guard for VGT31 Globe
VGR48	Steel Wire Guard for All VRF Series 12" Refractors
VGR64	Steel Wire Guard for VR31CB Enclosed High Bay Reflector

Tuff-Skin is a registered trademark of Thomas Manufacturing Corp.

Area Lighting — Hazlux® 3 Class I, Div 2

Dimensions — Large Ballast Housing with Globe and Guard

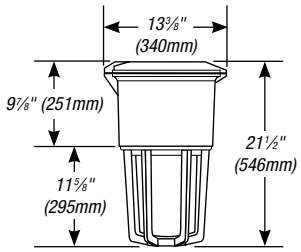

Rigid Pendant

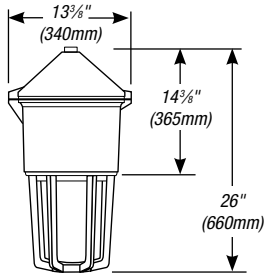

Cone-Top Pendant

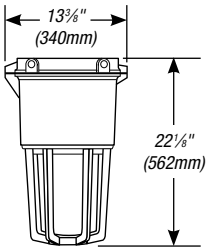

Ceiling Mount

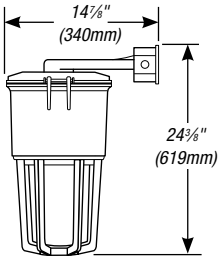

Wall Mount

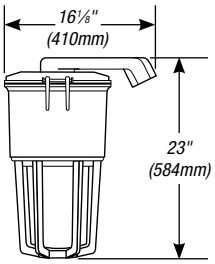

25° Angle Stanchion Mount

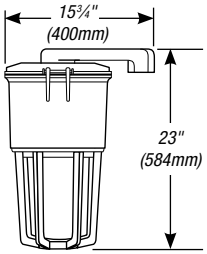

Straight Stanchion

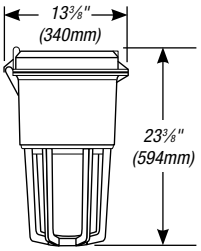

HazVertor® Ring

Dimensions — Large Ballast Housing with 12" Refractor and Guard

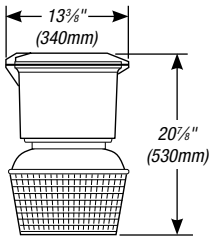

Flexible Pendant

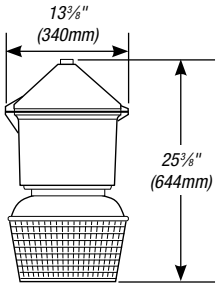

Cone-Top Pendant

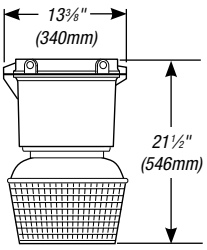

Ceiling Mount

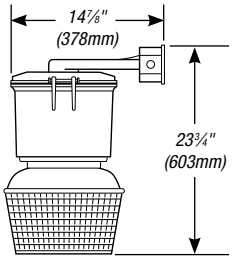

Wall Mount

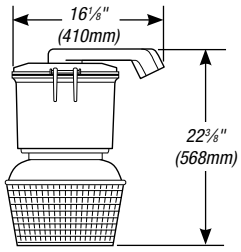

25° Angle Stanchion Mount

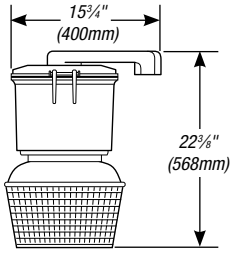

Straight Stanchion

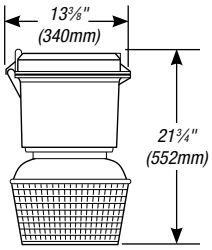

HazVertor® Ring

Class I — Zone 2, Groups IIC, IIB, IIA
— Division 2, Groups A, B, C and D
Class II — Division 1 and 2, Groups E, F and G
Class III

- UL® Listed (UL1598A) for Marine Locations
- UL844
- NEMA 4X, IP66

Contact your Thomas & Betts sales representative to verify classification.

Area Lighting — Hazlux® 3 Class I, Div 2

Now You Can Use the Longest-Life Lamp Available on the Market.

In the typical process industry plant, reliable lighting is often required in hazardous, hard-to-reach places. Lamp replacement not only places employees at risk, but often requires the rental of expensive equipment such as scissors lifts.

With the introduction of Hazlux Induction Lighting Fixtures for hazardous areas (Class 1, Div. 2 Groups A, B, C, D) and non-hazardous areas, you can benefit from the longest lamp life available on the market. Hazlux® 3 HID lights are equipped with Philips® QL Induction lamps for the longest lamp life ever.

Features include:

- 100,000+ hour lamp life
- Reduced maintenance/re-lamp operations
- Instant On/Instant Restrike
- Automatic switch-off in case of failure
- Warm white light
- Exceptional energy efficiency
- -40° C to 40° C ambient operating range
- Retrofits into existing Hazlux® 3 applications
- Acceptable for use with infrared remote control equipment operating at 36 kHz
- RFI-approved for environments up to 1,000 MHz (FCC part 18 reference luminaire)

Here's how you save maintenance costs with Hazlux® Induction Lighting:

- Eliminates the need for expensive HID options such as Quartz Auxiliary Lamps or Instant Restrike
- Reduces risks to installers performing maintenance in hard-to-reach places
- Increases efficiency by decreasing machine shutdown time
- Reduces number of times necessary to de-energize entire circuit of lights for maintenance in hazardous locations
- Lowers cost of expensive rental of scissor lifts or bucket trucks

Hazlux® Induction Lighting reduces the cost of expensive maintenance of industrial lighting in hazardous locations.

Area Lighting — Hazlux® 3 Class I, Div 2

Hazlux® 3 Induction Lighting Fixture Assembly Guide

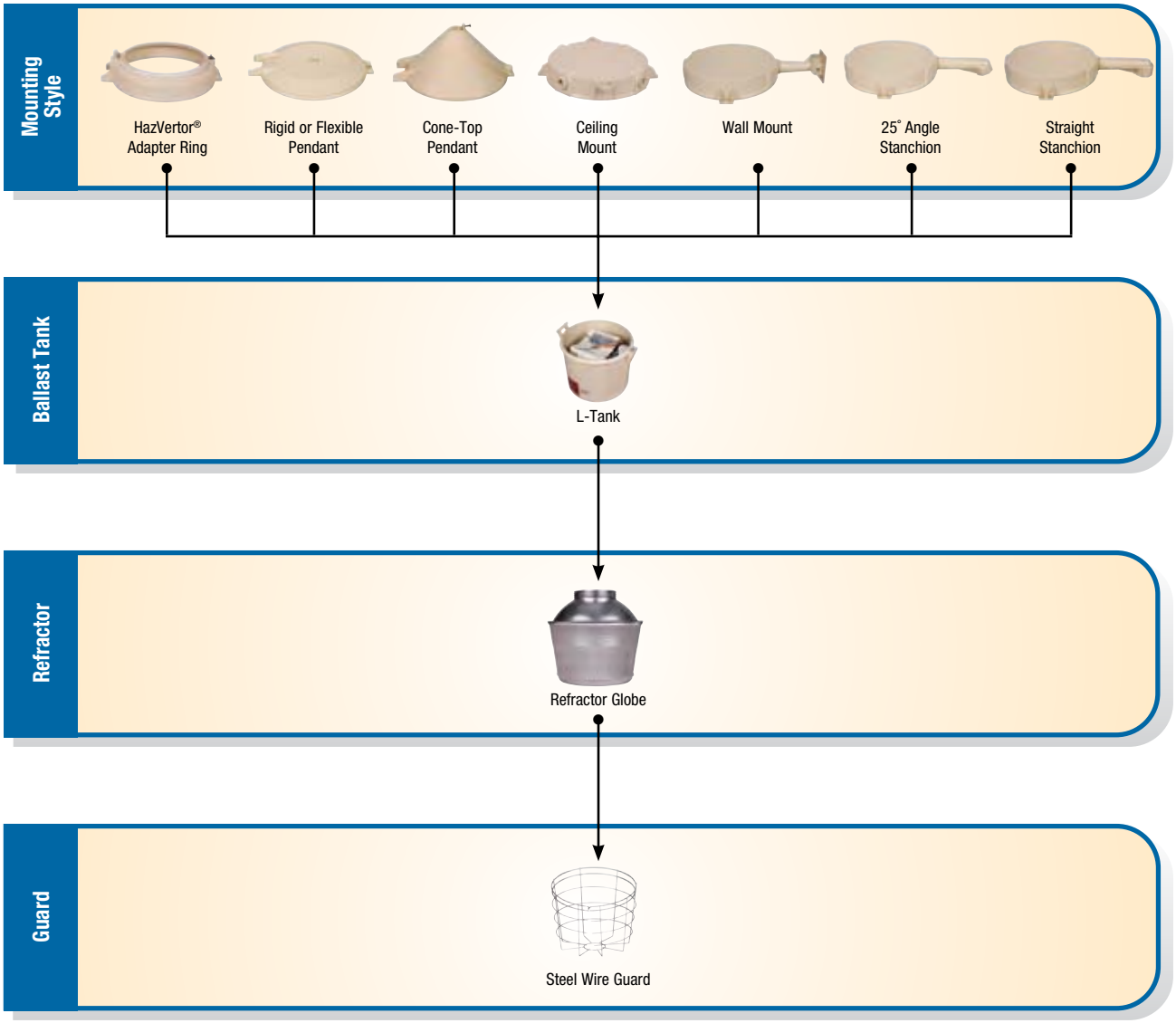

Thomas&Betts

United States
Tel: 901.252.8000
800.816.7809
Fax: 901.252.1354

Technical Services
Tel: 888.862.3289

www.tnb.com

Area Lighting — Hazlux® 3 Class I, Div 2

Hazlux® 3 Induction Lighting Fixtures Catalog Numbering System

D	I	0	16	E	12	L	-	R5G	-	P2	T	E
1	2	3	4	5	6	7		8		9	11	12

1 Hazlux 3 HID Fixture
- **D =** Class I, Div. 2, Groups A, B, C and D
- **D =** Class I, Zone 2, Groups IIA, IIB, IIC
- **D =** Class II, Div. 1 & 2, Groups E, F and G
- **D =** Class III
  UL 595 Marine Locations,
  Wet Locations, NEMA 4X

2 Lamp Type
- **I =** Induction Lighting

3 Starter Circuit/Quartz Options
- **0 =** Standard Fixture

4 Lamp Wattage
- **16 =** 165 Watt Induction System

5 Ballast Circuit
- **E =** Electronic Ballast (Induction Fixture)

6 Voltage
- **12 =** 120V, 60 Hz
- **06 =** 208/240/277V 50 or 60 Hz
- **34 =** 347V 60 Hz (CSA)

7 Tank
- **L =** Large Tank
- **M =** Large Tank with Stainless Steel Inserts

8 Refractor
- **R5G =** Type V Refractor with Wire Guard
- **R5 =** Type V Refractor

9 Mounting Style
- **A2 =** ¾" Cone-Top Pendant
- **A3 =** 1" Cone-Top Pendant Mount
- **B2 =** ¾" Wall Mount
- **B3 =** 1" Wall Mount
- **C2 =** ¾" Ceiling Mount
- **C3 =** 1" Ceiling Mount
- **F2 =** ¾" Flexible Pendant
- **F3 =** 1" Flexible Pendant
- **HV1 =** HazVertor® Ring — Class I, Division 2
- **HV2 =** HazVertor® Ring — Class II, Division 1
- **L4 =** 1¼" Straight Stanchion
- **L5 =** 1½" Straight Stanchion
- **P2 =** ¾" Rigid Pendant
- **P3 =** 1" Rigid Pendant
- **S4 =** 1¼" 25° Angle Stanchion
- **S5 =** 1½" 25° Angle Stanchion

10 Coating
- **T =** HazCote® Custom Corrosion Coating
- **G =** Gray Color Option

11 UNIPAK® Options
- **E =** UNIPAK® with Induction Lamp

12 Fusing Options
- **F =** Fuse Block(s) with Fuse(s)

13 CSA Certification
- **C =** CSA Nameplate

Class I — Zone 2, Groups IIC, IIB, IIA
— Division 2, Groups A, B, C and D
Class II — Division 1 and 2, Groups E, F and G
Class III
- UL® Listed (UL1598A) for Marine Locations
- UL844
- NEMA 4X, IP66

Contact your Thomas & Betts sales representative to verify clasification.

Area Lighting — Hazlite® M3 Class I, Div 2

Hazlite® M3 Fixture Assembly Guide

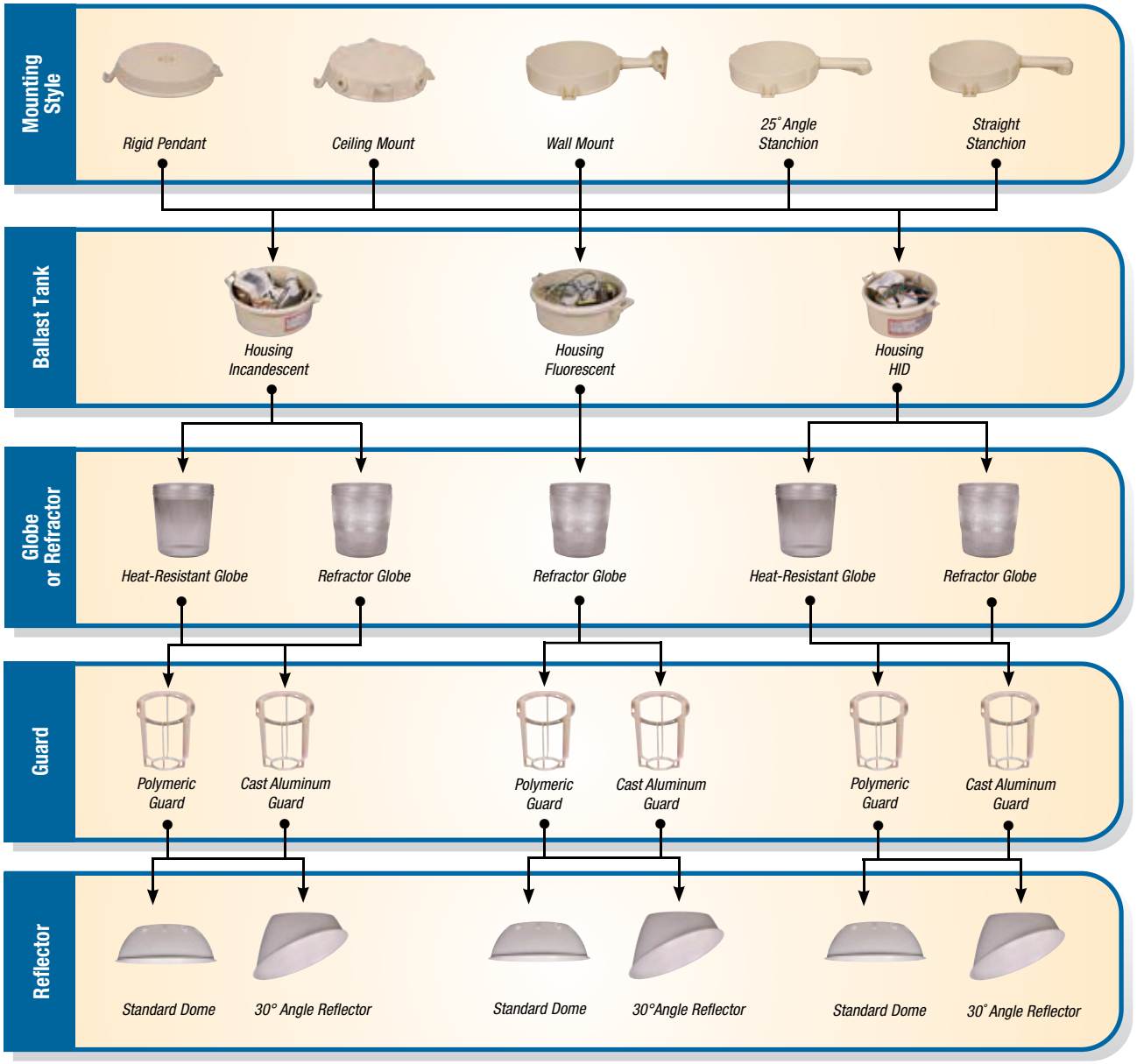

Thomas&Betts

United States
Tel: 901.252.8000
800.816.7809
Fax: 901.252.1354

Technical Services
Tel: 888.862.3289

www.tnb.com

Area Lighting — Hazlite® M3 Class I, Div 2

Hazlite® M3 Fixtures Catalog Numbering System

	1	2	3	4	5	6	7	8	10
HID	D	S	M	07	P	12	R5P	C2	E
Incandescent Only	D	I	M	10	0	12	TGL	C2	C
Fluorescent Only	D	F	B	18	0	12	TGL	C2	D

1 Fixture Series
- **D =** Hazlite® M3 Fixture

2 Lamp Type
- **S =** High-Pressure Sodium
- **H =** Metal Halide
- **F =** Fluorescent
- **I =** Incandescent

3 Lampholder
- **M =** Medium-Base Lampholder
- **B =** Bi-Pin Type (Fluorescent)

4 Lamp Wattage
- **09 =** 9 Watts
- **13 =** 13 Watts
- **18 =** 18 Watts
- **26 =** 26 Watts
- **03 =** 35 Watts
- **05 =** 50 Watts
- **07 =** 70 Watts
- **75 =** 75 Watts
- **10 =** 100 Watts
- **15 =** 150 Watts (HPS Only)

5 Ballast Circuit
- **C =** Constant Wattage Autotransformer (CWA)
- **P =** Reactor Type
- **0 =** Incandescent and Fluorescent Lamp — No Ballast Circuit

6 Voltage
- **12 =** 120 Volt

7 Optical Assembly Options
- **TG =** Tempered Globe Only
- **TGL =** Tempered Globe and Polymeric Guard
- **TGC =** Tempered Globe and Cast Guard
- **R1 =** Type I (Long and Narrow) Glass Refractor
- **R3 =** Type III (Asymmetric) Glass Refractor
- **R5 =** Type V (Symmetric) Glass Refractor
- **R1P =** R1 with Polymeric Guard
- **R3P =** R3 with Polymeric Guard

7 Optical Assembly Options *(continued)*
- **R5P =** R5 with Polymeric Guard
- **R1C =** R1 with Cast Guard
- **R3C =** R3 with Cast Guard
- **R5C =** R5 with Cast Guard
- **R5A =** 8" Glass Refractor (Type V)

8 Mounting Style
- **P2 =** ¾" Rigid Pendant
- **P3 =** 1" Rigid Pendant
- **B2 =** ¾" Wall Mount
- **B3 =** 1" Wall Mount
- **C2 =** ¾" Ceiling Mount
- **C3 =** 1" Ceiling Mount
- **L4 =** 1¼" Straight Stanchion
- **L5 =** 1½" Straight Stanchion
- **S4 =** 1¼" 25° Angle Stanchion
- **S5 =** 1½" 25° Angle Stanchion

9 Special Options
- **T =** HazCote® Custom Corrosion Coating on All Aluminum Parts (Consult Factory)
- **G =** Gray Color Option

10 UNIPAK® Options
- **D =** UNIPAK® with Diffused Coated Lamp
- **E =** UNIPAK® with Clear Lamp

11 CSA Certification
- **C =** CSA Nameplate

Class I — Zone 2, Groups IIC, IIB, IIA
— Division 2, Groups A, B, C and D
Class II — Division 1 and 2, Groups E, F and G
Class III
- UL® Listed (UL1598A) for Marine Locations
- UL844
- NEMA 4X, IP66

Contact your Thomas & Betts sales representative to verify classification.

For photometric information, visit www.tnb.com

Area Lighting — Hazlite® M3 Class I, Div 2

Mounting Options

Rigid Pendant

Ceiling Mount

Wall Mount

Straight Stanchion

25° Angle Stanchion

CAT. NO.	DESCRIPTION	CONDUIT HUB SIZE
VMP2	Rigid Pendant	¾"
VMP3		1"
VMC2	Celing Mount	¾"
VMC3		1"
VMB2	Wall Mount	¾"
VMB3		1"
VMS4	25° Angle Stanchion	1¼"
VMS5		1½"
VML4	Straight Stanchion	1¼"
VML5		1½"

Globes or Refractors

IES Type V Refractor Globe

Heat-Resistant Prismatic Glass Globe

Low-Bay Refractor

CAT. NO.	DESCRIPTION
VGT15	Heat-Resistant Prismatic Glass Globe
VGL15P	Polycarbonate Plastic Globe
VGL15R1	IES Type I Refractor Globe
VGL15R3	IES Type III Refractor Globe
VGL15R5	IES Type V Refractor Globe
VRF22C5A	8" IES Type V Refractor Globe
VR22CBDL	Low-Bay Refractor with Plastic Lens

Reflectors or Exit Sign

Standard Dome

30° Angle Reflector

Three-Sided Exit Sign

CAT. NO.	DESCRIPTION
VR15P	Standard Dome, Fiberglass-Reinforced Polyester
VRA15P	30° Angle Reflector, Fiberglass-Reinforced Polyester
VRE22	Three-Sided Exit Sign

Guards

Cast Aluminum Guard

Polymeric Guard

CAT. NO.	DESCRIPTION
VGU15	Cast Aluminum for Use with Glass Globes or Refractors
VGU15P	Polymeric for Use with Glass Globes or Refractors

Area Lighting — Hazlite® M3 Class I, Div 2

Dimensions — Hazlite® M3 Fixtures

Rigid Pendant

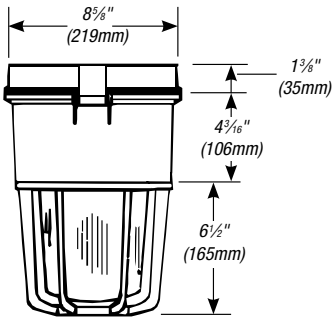

Wall Mount

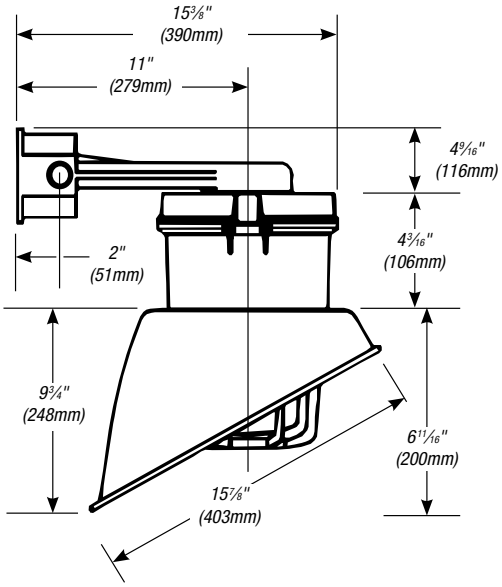

Ceiling Mount

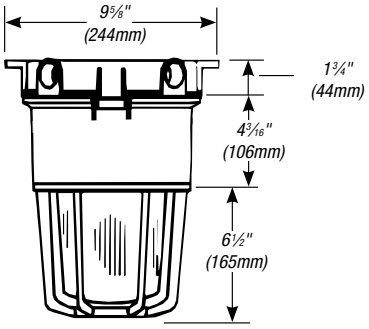

25° Angle Stanchion Mount

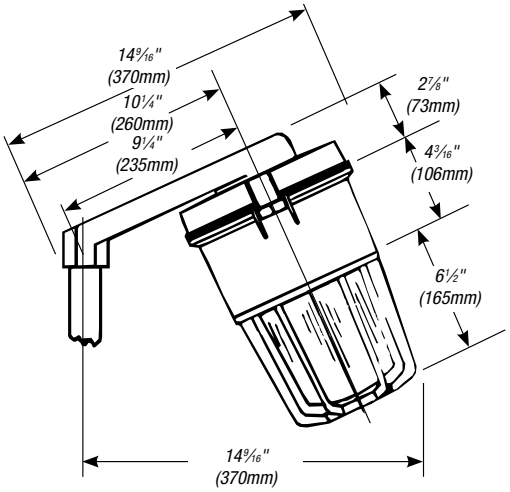

Straight Stanchion Mount

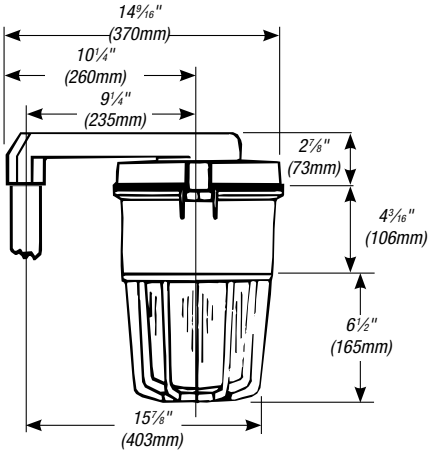

Class I — Zone 2, Groups IIC, IIB, IIA
— Division 2, Groups A, B, C and D
Class II — Division 1 and 2, Groups E, F and G
Class III

- UL® Listed (UL1598A) for Marine Locations
- UL844
- NEMA 4X, IP66

Contact your Thomas & Betts sales representative to verify classification.

Area Lighting — Hazlux® 1 (Polymeric) Class I, Div 2

Hazlux® 1 Certification Guide (40° C Ambient)

LAMP TYPE	WATTS	AMBIENT TEMP (DEG. C)	CLASS I, DIVISION 2 TEMPERATURE CODE		MARINE*	NEMA 4X (SUITABLE FOR HOSEDOWN)*	WET LOCATIONS	SUPPLY WIRE TEMP. RATING °C
			GLOBE/GUARD & REFLECTOR	REFRACTOR/ GUARD*				
High-Pressure Sodium	50	40	T3	T3	Yes	Yes	Yes	90
	70	40	T3	T3	Yes	Yes	Yes	90
	100	40	T3	T3	Yes	Yes	Yes	90
	150	40	T2C	T2C	Yes	Yes	Yes	90
Metal Halide	70	40	T3C	T3C	Yes	Yes	Yes	90
	100	40	T3	T3	Yes	Yes	Yes	90
	175	40	T2B	T2A	Yes	Yes	Yes	90

Hazlite® M1 Certification Guide

LAMP TYPE	AMBIENT (DEG. C)	MARINE	ORDINARY	CLASS I, DIVISION 2 GLOBES — "TR" REFRACTOR WITH/ WITHOUT REFLECTORS		NEMA 4X (SUITABLE FOR HOSEDOWN)*	SUPPLY WIRE SUITABLE °C	VOLTS
				TEMP. °C	TEMP. CODE			
35-Watt	40	Yes	Yes	180	T3A	Yes	75	120
HPS Type S76	55	Yes	Yes	200	T3	Yes	90	120
50-Watt	40	Yes	Yes	215	T2D	Yes	75	120
HPS Type S68	55	Yes	Yes	215	T2D	Yes	90	120
70-Watt	40	Yes	Yes	260	T2B	Yes	75	120
HPS Type S62	55	Yes	Yes	260	T2B	Yes	90	120
70-Watt	40	Yes	Yes	260	T2B	Yes	75	120
HPS Type S62	55	Yes	Yes	260	T2B	Yes	90	120
100-Watt HPS Type S54	40	No	Yes	280	T2A	Yes	125	120
9-Watt Fluorescent	40	Yes	Yes	160	T3C	Yes	90	120
13-Watt Fluorescent	40	Yes	Yes	160	T3C	Yes	90	120
18-Watt Fluorescent	40	Yes	Yes	160	T3C	Yes	90	120
26-Watt Fluorescent	40	Yes	Yes	200	T3	Yes	90	120

** All Hazlux fixture assemblies shown in this Buyers Guide as UL Listed or CSA Certified for Marine applications are suitable for hosedown when fixture is off and glass has been allowed to cool. Tempered glass globes and refractors have better thermal shock resistance properties than non-tempered globes and refractors and should be considered whenever fixtures are subject to being splashed with significantly cooler liquids while illuminated (hot). Consult factory for more information.*

Thomas&Betts

United States
Tel: 901.252.8000
800.816.7809
Fax: 901.252.1354

Technical Services
Tel: 888.862.3289

www.tnb.com

Area Lighting — Hazlux® 1 (Polymeric) Class I, Div 2

Hazlux® 1 Fixture for Corrosive Environments Assembly Guide

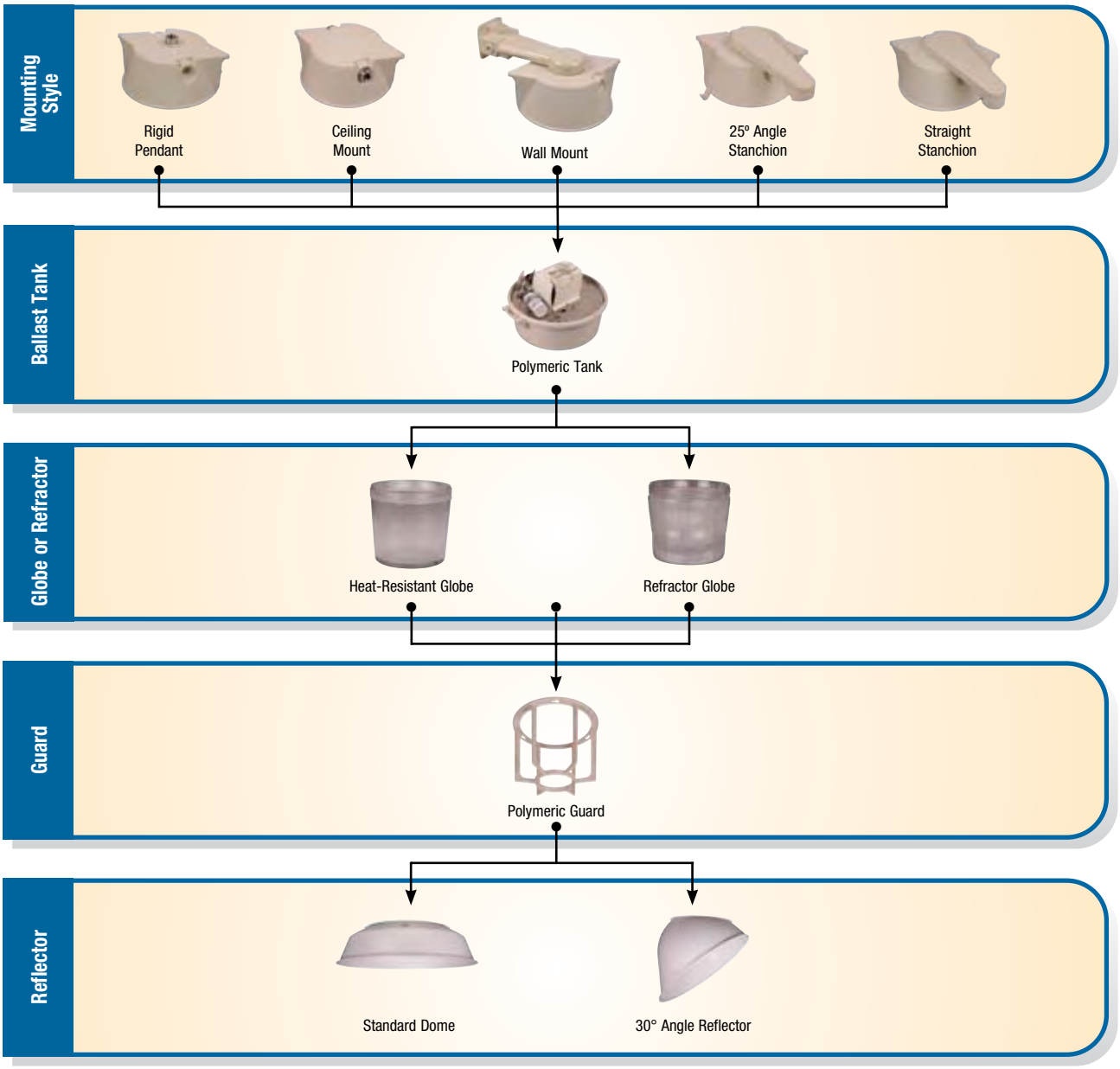

www.tnb.com

United States
Tel: 901.252.8000
800.816.7809
Fax: 901.252.1354

Technical Services
Tel: 888.862.3289

Thomas&Betts

Area Lighting — Hazlux® 1 (Polymeric) Class I, Div 2

Hazlux® 1 Fixture for Corrosive Environments Catalog Numbering System

P	S	Ø	07	H	04	0	-	R5P	-	C2	E	4	F
1	2	3	4	5	6	7		8		9	10	11	12

1 Fixture Series
- **P =** Hazlux® 1 Fixture

2 Lamp Type
- **H =** Metal Halide
- **S =** High-Pressure Sodium

3 Starter Options
- **Ø =** Standard Fixture
- **J =** Auto-Shutoff
- **P =** Pulse Start (Metal Halide only)

4 Lamp Wattage
- **05 =** 50 Watts
- **07 =** 70 Watts
- **10 =** 100 Watts
- **15 =** 150 Watts*
- **17 =** 175 Watts (Metal Halide Only)*

5 Ballast Circuit
- **C =** Constant Wattage Auto Transformer
- **H =** High Reactance
- **P =** Reactor Type
- **I =** CWI

6 Voltage/Frequency
- **03 =** 120/277 Volt
- **04 =** 120/208/240/277 Volt
- **12 =** 120 Volt
- **27 =** 277 Volt
- **28 =** 208 Volt
- **34 =** 347 Volt
- **48 =** 480 Volt

7 Tank
- **0 =** Standard Housing

** 150-Watt Metal Halide and 175-Watt Metal Halide not available with Pendant Mount.*

8 Optical Assembly Options
- **TG =** Tempered Globe Only
- **TGP =** Tempered Glass Globe with Polymeric Guard
- **RI =** Glass Refractor (IES Type I) without Guard
- **R3 =** Glass Refractor (IES Type III) without Guard
- **R5 =** Glass Refractor (IES Type V) without Guard
- **R1P =** Glass Refractor (IES Type I) with Polymeric Guard
- **R3P =** Glass Refractor (IES Type III) with Polymeric Guard
- **R5P =** Glass Refractor (IES Type V) with Polymeric Guard

9 Mounting Style
- **P2 =** ¾" Pendant Mount*
- **B2 =** ¾" Wall Mount
- **C2 =** ¾" Ceiling Mount
- **S5 =** 1½" 25° Angle Stanchion
- **L5 =** 1½" Straight Stanchion

10 UNIPAK® Options
- **E =** UNIPAK® with Clear Lamp
- **D =** UNIPAK® with Diffused Coated Lamp
- **U =** UNIPAK® without Lamp

11 Reflector Options
- **4 =** Dome Reflector
- **5 =** Angle Reflector

12 Fusing Options
- **F =** Fuse Block(s) with Fuse(s)

13 CSA Certification
- **C =** CSA Nameplate

Class I — Zone 2, Groups IIC, IIB, IIA
— Division 2, Groups A, B, C and D
Class II — Division 1 and 2, Groups E, F and G
Class III
- UL® Listed (UL1598A) for Marine Locations
- UL844
- NEMA 4X, IP66

Contact your Thomas & Betts sales representative to verify classification.

Thomas&Betts

United States
Tel: 901.252.8000
800.816.7809
Fax: 901.252.1354

Technical Services
Tel: 888.862.3289

www.tnb.com

Area Lighting — Hazlux® 1 (Polymeric) Class I, Div 2

Mounting Options

Rigid Pendant

Ceiling Mount

Wall Mount with Metallic Arm

25° Angle Stanchion

Straight Stanchion

CAT. NO.	DESCRIPTION	CONDUIT HUB SIZE	STD. PKG.
VNP2	Rigid Pendant	¾"	1
VNC2	Ceiling Mount	¾"	1
VNB2	Wall Mount with Metallic Arm	¾"	1
VNS5	25° Angle Stanchion	1½"	1
VNL5	Straight Stanchion	1½"	1

Designed for all Hazlux® 1 Ballast Housings.

Globes or Refractors

Heat-Resistant Glass Globe

IES Type I Refractor Globe

CAT. NO.	DESCRIPTION
VGT31S	Heat-Resistant Glass Globe (7¾" dia.) 250 Watt Max.
VGT31STS	Heat-Resistant Glass Globe (7¾" dia.) Coated with Tuff-Skin®, 250 Watt Max.
VGL31R1	IES Type I Light Distribution (Long and Narrow) Threaded Glass Globe Refractor 7¾" dia.
VGL31R3	IES Type III Light Distribution (Asymmetric) Threaded Glass Globe Refractor 7¾" dia.
VGL31R5	IES Type V Light Distribution (Symmetric) Threaded Glass Globe Refractor 7¾" dia.

Reflectors

Standard Dome

30° Angle Reflector

CAT. NO.	DESCRIPTION
VR31P	Standard Dome, Fiberglass-Reinforced Polyester, for Use with 7¾"-dia. Globes
VRA31P	30° Angle Reflector, Fiberglass-Reinforced Polyester, for Use with 7¾"-dia. Globes

Guard

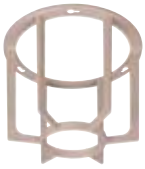

Polymeric Guard

CAT. NO.	DESCRIPTION
VGU31RP	Polymeric Guard for Use with Threaded Glass Globes and Refractors (7¾" dia.)

Area Lighting — Hazlux® 1 (Polymeric) Class I, Div 2

Hazlux® 1 Fixture for Corrosive Environments Dimensions

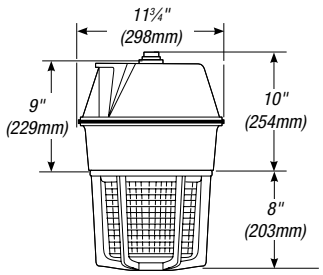

Pendant Mount with Refractor and Guard

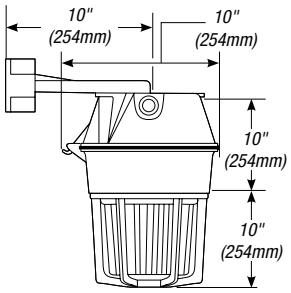

Wall Arm Mount with Globe and Guard

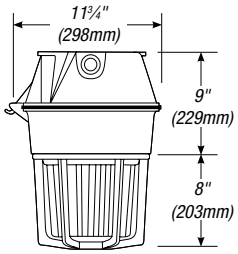

Ceiling Mount with Globe and Guard

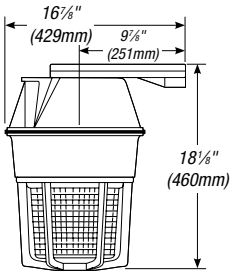

Straight Stanchion Mount

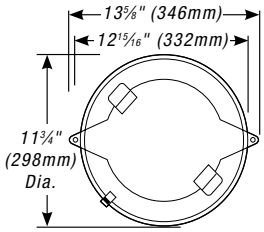

Ceiling Mount Top View

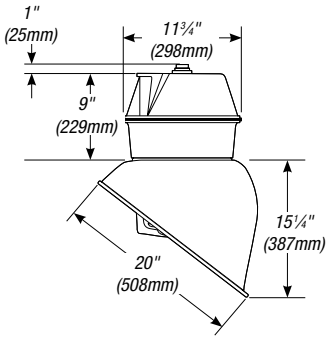

Angle Reflector with Globe and Guard

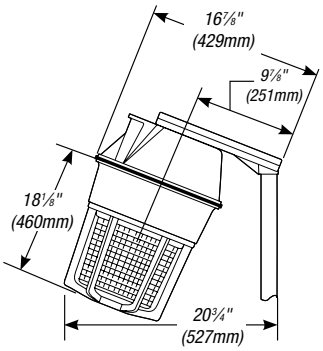

25° Angle Stanchion Mount

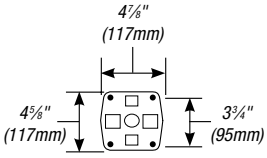

Wall-Mount Flange Template

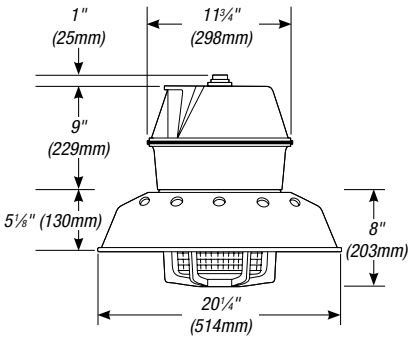

Dome Reflector with Refractor and Guard

Class I — Zone 2, Groups IIC, IIB, IIA
— Division 2, Groups A, B, C and D

- UL® Listed (UL1598A) for Marine Locations
- UL844
- NEMA 4X, IP66

Contact your Thomas & Betts sales representative to verify classification.

Thomas&Betts

United States
Tel: 901.252.8000
800.816.7809
Fax: 901.252.1354

Technical Services
Tel: 888.862.3289

www.tnb.com

Area Lighting — Hazlite® M1 (Polymeric) Class I, Div 2

Hazlite® M1 Fixture for Highly Corrosive Environments Assembly Guide

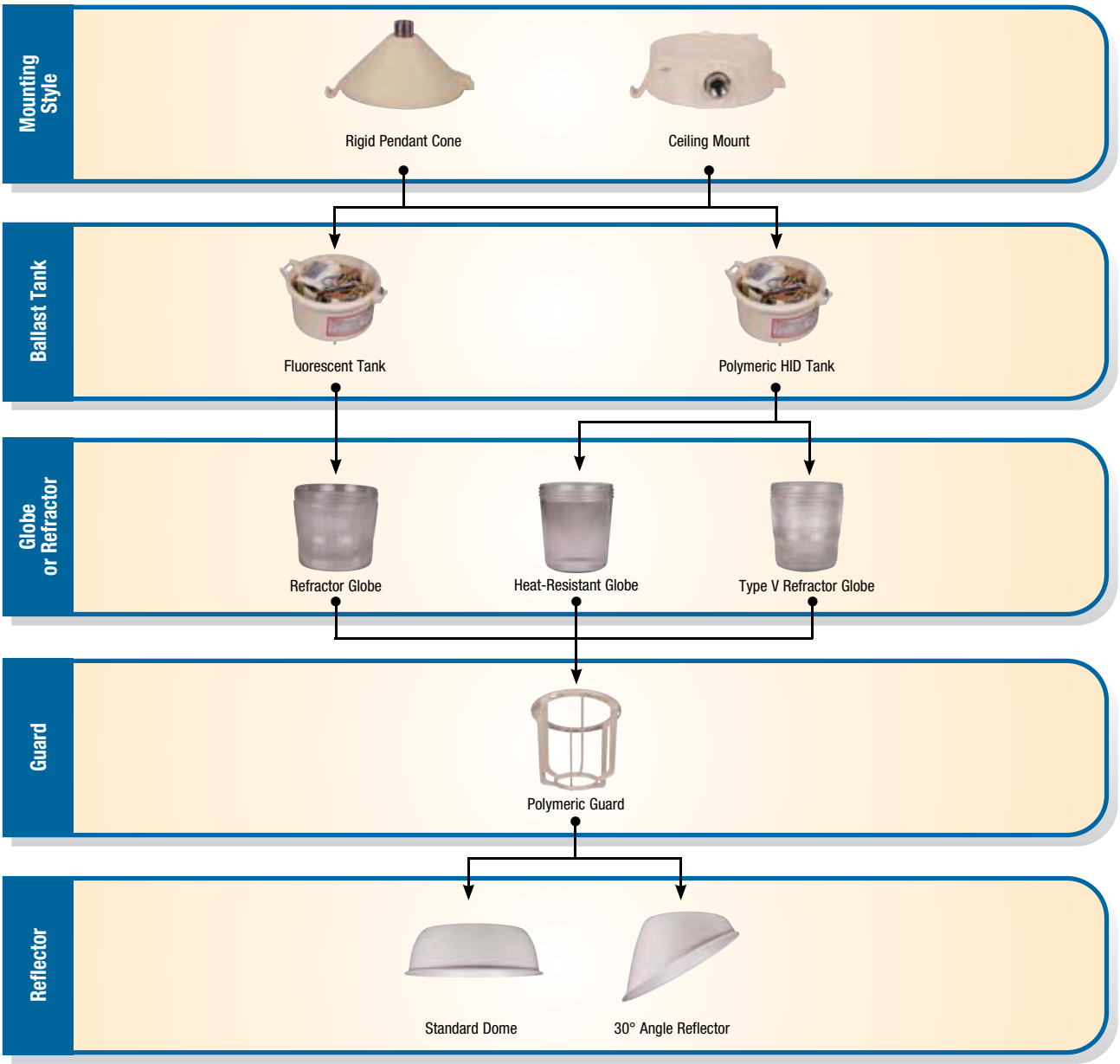

www.tnb.com

United States
Tel: 901.252.8000
800.816.7809
Fax: 901.252.1354

Technical Services
Tel: 888.862.3289

Thomas&Betts

Area Lighting — Hazlite® M1 (Polymeric) Class I, Div 2

Hazlite® M1 Fixture for Highly Corrosive Environments Catalog Numbering System

High-Pressure Sodium/ Metal Halide	PD	S	M	05	P	12	0	TGL	C2	E	1	F
	1	2	3	4	5	6	7	8	9	10	11	12
Fluorescent Only	PD	F	B	13	P	12	0	TGL	C2	E		
	1	2	3	4	5	6	7	8	9	10		

1 Fixture Series
- **PD =** Hazlite® M1 Fixture

2 Lamp Type
- **H =** Metal Halide
- **S =** High Pressure Sodium
- **F =** Fluorescent

3 Lampholder
- **M =** Medium Base Lampholder
- **B =** Bi-Pin Type (Fluorescent)

4 Lamp Wattage
- **09 =** 9 Watts (Fluorescent)
- **13 =** 13 Watts (Fluorescent)
- **18 =** 18 Watts (Fluorescent)
- **26 =** 26 Watts (Fluorescent)
- **03 =** 35 Watts
- **05 =** 50 Watts
- **07 =** 70 Watts
- **10 =** 100 Watts

5 Ballast Circuit
- **P =** Reactor Type, Fluorescent
- **H =** High Reactance

6 Voltage
- **04 =** 120/208/240/277 Volt
- **12 =** 120 Volt
- **27 =** 277 Volt (Fluorescent)

7 Tank
- **0 =** Standard Housing

8 Optical Assembly Options
- **TG =** Tempered Globe Only
- **TGL =** Tempered Globe and Polymeric Guard
- **R1 =** Glass Refractor (IES Type I) without Guard
- **R3 =** Glass Refractor (IES Type III) without Guard
- **R5 =** Glass Refractor (IES Type V) without Guard
- **R1P =** Glass Refractor (IES Type I) with Polymeric Guard
- **R3P =** Glass Refractor (IES Type III) with Polymeric Guard
- **R5P =** Glass Refractor (IES Type V) with Polymeric Guard

9 Mounting Style
- **P2 =** ¾" Cone Pendant
- **C2 =** ¾" Ceiling, 1 Hub
- **C22 =** ¾" Ceiling, 2 Hubs

10 UNIPAK® Options
- **E =** UNIPAK® with Clear Lamp
- **U =** UNIPAK® without Lamp

11 Reflector Option
- **1 =** Dome Reflector
- **2 =** Angle Reflector

12 Special Options
- **F =** Fuse Kit (for HID Only)

13 CSA Certification
- **C =** CSA Nameplate

Class I — Zone 2, Groups IIC, IIB, IIA
— Division 2, Groups A, B, C and D
- UL® Listed (UL1598A) for Marine Locations
- UL844
- NEMA 4X, IP66

Contact your Thomas & Betts sales representative to verify classification.

Thomas&Betts

United States
Tel: 901.252.8000
800.816.7809
Fax: 901.252.1354

Technical Services
Tel: 888.862.3289

www.tnb.com

Area Lighting — Hazlite® M1 (Polymeric) Class I, Div 2

Mounting Options

Rigid Pendant Cone

Ceiling Mount

CAT. NO.	DESCRIPTION	CONDUIT HUB SIZE	STD. PKG.
VPA2	Rigid Pendant Cone	¾	5
VPC2	Ceiling Mount	¾	5
VPC22 ***(feed-through)***			

Exit Sign

Three-Sided Exit Sign

CAT. NO.	DESCRIPTION	STD. PKG.	COLOR
VRE22	Three-Sided Exit Sign	1	Red

Globes or Refractors

IES Type V Refractor Globe

Heat-Resistant Prismatic Glass Globe

CAT. NO.	DESCRIPTION
VGT15	Heat-Resistant Prismatic Glass Globe
VGL15P	Polycarbonate Plastic Globe
VGL15R1	IES Type I Refractor Globe
VGL15R3	IES Type III Refractor Globe
VGL15R5	IES Type V Refractor Globe

Guards

Polymeric Guard

CAT. NO.	DESCRIPTION
VGU15P	Polymeric — for Use with Glass Globes or Refractors

Reflectors

Standard Dome

30° Angle Reflector

CAT. NO.	DESCRIPTION
VR15P	Standard Dome Fiber Glass Reinforced Polyester
VRA15P	30° Angle Reflector Fiber Glass Reinforced Polyester

Area Lighting — Hazlite® M1 (Polymeric) Class I, Div 2

Dimensions — Cone Pendant Mount

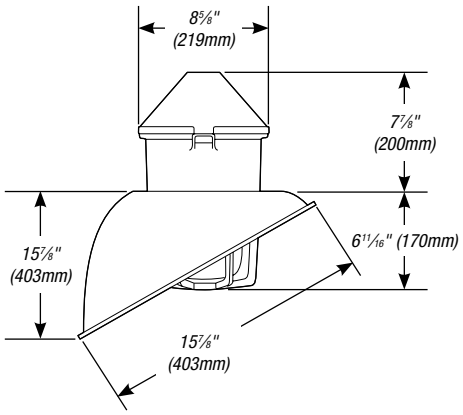

with Angled Reflector

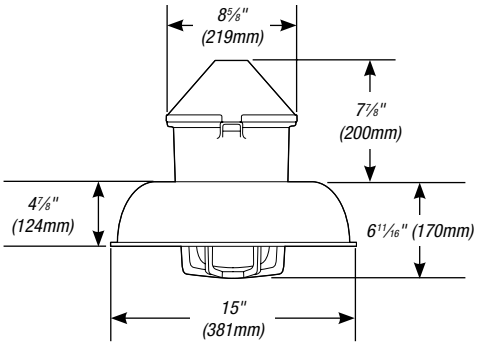

with Dome Reflector

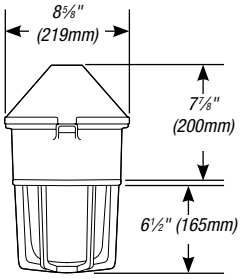

No Reflector

Dimensions — Ceiling Mount

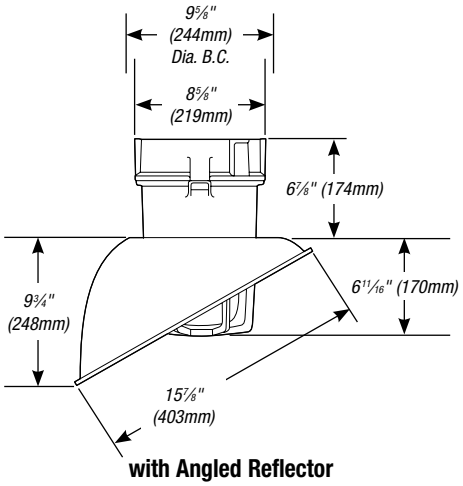

with Angled Reflector

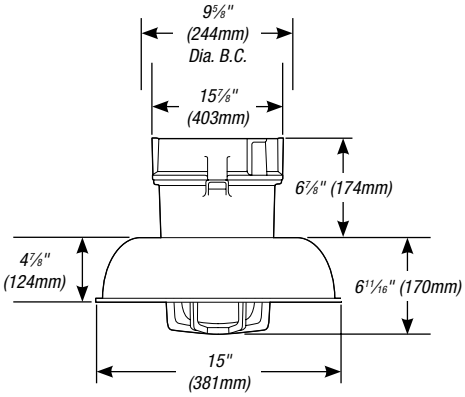

with Dome Reflector

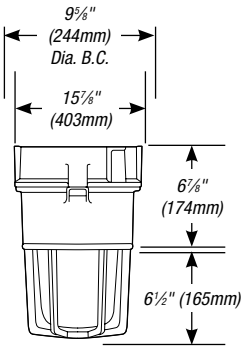

No Reflector

Class I — Zone 2, Groups IIC, IIB, IIA
— Division 2, Groups A, B, C and D

- UL® Listed (UL1598A) for Marine Locations
- UL844
- NEMA 4X, IP66

Contact your Thomas & Betts sales representative to verify classification.

Thomas&Betts

United States
Tel: 901.252.8000
800.816.7809
Fax: 901.252.1354

Technical Services
Tel: 888.862.3289

www.tnb.com

Hazlux® 5 HID Lighting Fixtures for Class I, Division 1, Groups C and D Hazardous Locations

Features

- UL® Listed for Class I, Division 1 for safe, explosion-proof application in a variety of hazardous areas
- Factory-sealed assembly meets code requirements without the need for external sealing fittings
- Dual-pitch Acme threads make assembly easy and faster than designs with standard V-cut threads, greatly reducing the risk of cross threading
- Factory-wired connection block means ballast is pre-wired to lower half of electrical connection block, allowing wireless connection of ballast housing to mounting module
- Five mounting styles — pendant, ceiling, wall, angle stanchion and bulkhead — provide versatility for installation
- Thermal shock-resistant glass globes are factory assembled and pre-tested to ensure the highest quality and safety
- Die-cast aluminum guards are epoxy powder coated for corrosion resistance and have keyhole slots for easy attachment to stainless steel screws
- Choice of high-pressure sodium and metal halide light sources in wattages from 50 to 400 watts
- Polymeric reflectors are available in standard dome and 30° angle versions
- UL® Listed for Marine and Wet Locations, making Hazlux® 5 fixtures ideal for use in many outdoor, offshore, hosedown and coastal locations
- UL® Paint Spray Listed in wattages up to 100 watts

Applications

- Chemical Plants
- Oil Refineries
- Offshore Platforms
- Waste Treatment Facilities
- Automotive Manufacturing Plants
- Paint Manufacturing Facilities
- Paint Spray Locations
- Chemical and Plastic Mixing and Storage Areas
- Pipeline Pumping Stations
- Oil and Gas Terminals
- Defense and Government Facilities

Wattages and Voltages

- High-Pressure Sodium: 50–400 Watts
- Metal Halide: 70–400 Watts
- All Luminaires: Multi-Tap standard (120, 208, 240, 277V), wired 120V

Other voltages, frequencies available; contact Thomas & Betts.

Materials and Finishes

- Ballast Housing: Copper-free aluminum, powder finish
- Mounting Modules: Copper-free aluminum, powder finish
- Hardware: Stainless steel
- Globes: Tempered glass
- Guard: Copper-free aluminum, powder finish
- Reflectors: Fiberglass-reinforced

Certifications

- UL844 Class I, Division 1, Groups C, D
- UL844 Paint Spray (100W max.)
- UL844 Class II, Division 1, Groups E, F, G
- Outdoor Wet Locations
- UL1598A Marine Locations
- Temperature Range: -30° C to 40° C

Area Lighting — Hazlux® 5 Class I, Div 1

Hazlux® 5 Certification Guide (40° C Ambient)

LAMP TYPE		WATTS	CLASS I, DIVISION 1 GROUPS C AND D RATED TEMP °C	CLASS I, DIVISION 1 GROUPS C AND D "T" NO.	CLASS II, DIVISION 1 AND 2 RATED TEMP °C	CLASS II, DIVISION 1 AND 2 GROUPS	CLASS III, DIVISION 1 AND 2	NEMA 4X (SUITABLE FOR HOSEDOWN)*	MARINE LISTED (UL 1598A)
High-Pressure Sodium	With or without Instant Restart	50**	85	T6	100	EFG	Yes	Yes	Yes
		70**	85	T6	120	EFG	Yes	Yes	Yes
		100**	100	T5	135	EFG	Yes	Yes	Yes
		150(S55)	120	T4A	160	EFG	Yes	Yes	Yes
		150(S56)	120	T4A	160	EFG	Yes	Yes	Yes
		250	120	T4A	—	—	—	Yes	Yes
		400	160	T3C	—	—	—	Yes	Yes
	With Auxiliary Quartz	50	120	T4A	160	EFG	Yes	Yes	Yes
		70	120	T4A	160	EFG	Yes	Yes	Yes
		100	160	T3C	200	EF	—	Yes	Yes
		150(S55)	160	T3C	200	EF	—	Yes	Yes
		150(S56)	160†	T3C†	—	—	—	Yes	Yes
Metal Halide		100†	100†	T5					
		175	120	T4A	180	EF	—	Yes	Yes
		250	160	T3C	200	EF	—	Yes	Yes
		400	165	T3B	—	—	—	Yes	Yes
	With Auxiliary Quartz	175	160†	T3C†	—	—	—	Yes	Yes
		250	180†	T3A†	—	—	—	Yes	Yes

** All Hazlux® fixture assemblies shown in this Buyers Guide as UL Listed or CSA Certified for Marine applications are suitable for hosedown when fixture is off and glass has been allowed to cool. Tempered glass globes and refractors have better thermal shock resistance properties than non-tempered globes and refractors and should be considered whenever fixtures are subject to being splashed with significantly cooler liquids while illuminated (hot). Consult factory for more information.*

*** For fixtures suitable (UL® Listed) for use in paint spray areas, add suffix "PS" to the number.*

† 100W MH is UL® Listed for paint spray.

Hazlite® M5 Certification Guide (40° C Ambient)

LAMP TYPE	WATTS	CLASS I, DIVISION 1, GROUPS C AND D CLASS I, DIVISION 2, GROUPS A,B,C AND D RATED TEMP °C	CLASS I, DIVISION 1, GROUPS C AND D CLASS I, DIVISION 2, GROUPS A,B,C AND D "T" NO.	CLASS II, DIVISION 1 AND 2 RATED TEMP °C	CLASS II, DIVISION 1 AND 2 GROUPS	CLASS III, DIVISION 1 AND 2	NEMA 4X*	MARINE LISTED (UL 1598A)
High-Pressure Sodium	35**	85	T6	100	EFG	Yes	Yes	Yes
	50**	85	T6	120	EFG	Yes	Yes	Yes
	70**	100	T5	135	EFG	Yes	Yes	Yes
	100	120	T4A	160	EFG	Yes	Yes	Yes
	150†	135	T4	—	—	—	Yes	Yes
Incandescent	100	100	T5	160	EFG	Yes	Yes	Yes
	150	120	T4A	200	EF	—	Yes	Yes
Fluorescent	18†**	85	T6	85	EFG	Yes	Yes	Yes
	26†**	58	T6	85	EFG	Yes	Yes	Yes

** All Hazlux® fixture assemblies shown in this Buyers Guide as UL Listed or CSA Certified for Marine applications are suitable for hosedown when fixture is off and glass has been allowed to cool. Tempered glass globes and refractors have better thermal shock resistance properties than non-tempered globes and refractors and should be considered whenever fixtures are subject to being splashed with significantly cooler liquids while illuminated (hot). Consult factory for more information.*

*** For fixtures suitable (UL® Listed) for use in paint spray areas, add suffix "PS" to the catalog number. Fluorescents T-Code will be T4A.*

† UL® Listed at 25° C.

Area Lighting — Hazlux® 5 Class I, Div 1

Hazlux® 5 Fixture Assembly Guide

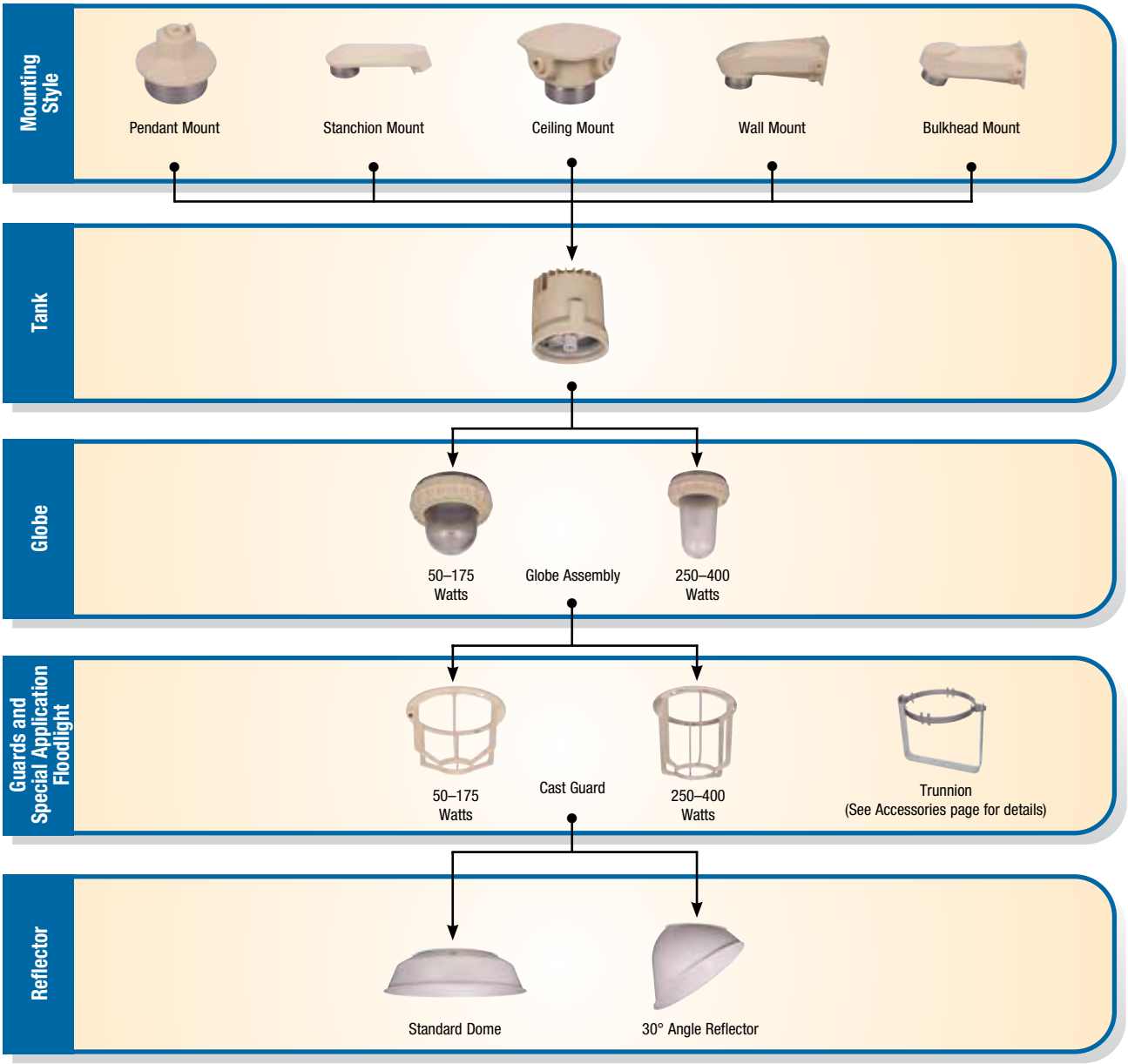

Hazlux® 5 Fixture Catalog Numbering System

X	S	Q	07	H	04	0	G	-	C2	-	E	4	F
1	2	3	4	5	6	7	8		9		11	12	13

1 Fixture Series
- **X =** Hazlux® 5 Fixture

2 Lamp Type
- **S =** High-Pressure Sodium
- **H =** Metal Halide

3 Starter Circuit/Quartz Options
- **0 =** Standard Fixture (Without Options)
- **P =** Pulse Start (Metal Halide Only)
- **Q =** Quartz Auxiliary Option
- **R =** Fixture with Instant Restart Option (70, 100 and 150 HPS Only)

4 Lamp Wattage
- **05 =** 50 Watts
- **07 =** 70 Watts
- **10 =** 100 Watts
- **15 =** 150 Watts
- **17 =** 175 Watts
- **25 =** 250 Watts
- **40 =** 400 Watts

5 Ballast Circuit
- **C =** Constant Wattage Autotransformer (CWA)
- **I =** Constant Wattage Insulated Transformer (CWI)
- **H =** High Reactance or Reactor (All Ballasts High Power Factor)

6 Ballast Voltage
- **04 =** Multi-Tap 120/208/240/277 Volt
- **12 =** 120 Volt
- **24 =** 240 Volt
- **28 =** 208 Volt
- **34 =** 347 Volt
- **48 =** 480 Volt

7 Housing
- **0 =** Standard Housing
- **S =** Standard Housing with Stainless Steel Inserts

***Note**: Verify hazardous location certification with your requirements on Hazlux® 5 Certification Guide on **page I-42**.*

8 Guard
- **G =** Cast Guard (Omit "G" if Guard Not Required)

9 Mounting Style
- **P2 =** ¾" Pendant
- **P3 =** ½" Pendant
- **C2 =** ¾" Ceiling
- **C3 =** 1" Ceiling
- **B2 =** ¾" Wall
- **B3 =** 1" Wall
- **J2 =** ¾" Bulkhead
- **J3 =** 1" Bulkhead
- **S4 =** 25° 1¼" Stanchion
- **S5 =** 25° 1½" Stanchion

10 Special Options
- **T =** HazCote® Custom Corrosion Coating on all Aluminum Parts (Consult Factory)
- **G =** Gray Color Option
- **PS =** Paint Spray Label (100W max.)

11 UNIPAK® Options
- **D =** UNIPAK® with Diffuse Coated Lamp
- **E =** UNIPAK® with Clear Lamp

12 Reflector Options
- **4 =** Dome Reflector
- **5 =** Angle Reflector
- **6 =** Deep Dome Reflector

13 Fusing Options
- **F =** Fuse Block(s) with Fuse(s)

14 CSA Certification
- **C =** CSA Nameplate

Class I — Division 1, Groups C and D
— Zone 2, Groups IIC, IIB and IIA
— Division 2, Groups A, B, C and D
Class II — Division 1 and 2, Groups E, F and G
- UL® Listed (UL1598A) for Marine Locations
- UL844
- NEMA 4X, IP66

Contact your Thomas & Betts sales representative to verify classification.

Thomas&Betts

United States
Tel: 901.252.8000
800.816.7809
Fax: 901.252.1354

Technical Services
Tel: 888.862.3289

www.tnb.com

Area Lighting — Hazlux® 5 Class I, Div 1

Mounting Options

Pendant Mount

Stanchion Mount

Ceiling Mount

Wall Mount

Bulkhead Mount

CAT. NO.	DESCRIPTION	CONDUIT HUB SIZE	STD. PKG.
XP2	Pendant Mount	¾	1
XP3		1	
XS4	Stanchion Mount	1¼	1
XS5		1½	
XC2	Ceiling Mount	¾	1
XC3		1	
XB2	Wall Mount	¾	1
XB3		1	
XJ2	Bulkhead Mount	¾	1
XJ3		1	

Outlet Boxes include female electrical connectors and appropriate close-up plugs.

Guards

XGU44 Cast Aluminum Guard

VGU31 Cast Aluminum Guard

CAT. NO.	DESCRIPTION
XGU44	Cast Aluminum Guard for 50–175 Watt Fixtures
VGU31	Cast Aluminum Guard for 250–400 Watt Fixtures

Replacement Globe Assemblies

XGSA44 Replacement Globe Assembly

XGSA44A Replacement Globe Assembly

CAT. NO.	DESCRIPTION
XGSA44	Hazlux 5 Replacement Globe Assembly — 50–175 Watts
XGSA44A	Hazlux 5 Replacement Globe Assembly — 250–400 Watts

Hazlux® 5 Floodlight (Trunnion Mount) and Accessories

CAT. NO.	DESCRIPTION
Hazlux® 5 Floodlight (Trunnion Mount) Class I, Division 1 Explosion-Proof	
XS005H030-P2-TR	50-Watt High-Pressure Sodium
XS007H040-P2-TR	70-Watt High-Pressure Sodium
XS010H040-P2-TR	100-Watt High-Pressure Sodium
XS015H040-P2-TR	150-Watt High-Pressure Sodium
XS025C040-P2-TR	250-Watt High-Pressure Sodium
XS040C040-P2-TR	400-Watt High-Pressure Sodium
XS017C040-P2-TR	175-Watt Metal Halide
XS025C040-P2-TR	250-Watt Metal Halide
XS040C040-P2-TR	400-Watt Metal Halide
Hazlux® 5 Flood Light Accessories	
VRA31	Angle Reflector
VR31P	Dome Reflector
VRD31	Deep Dome Reflector
XGU44	Cast Aluminum Guard for 50–175-Watt Fixtures
VGU31	Cast Aluminum Guard for 250–400-Watt Fixtures

Area Lighting — Hazlux® 5 Class I, Div 1

Hazlux® 5 Fixture Dimensions

Bulkhead Mount with Globe, Guard and Reflector

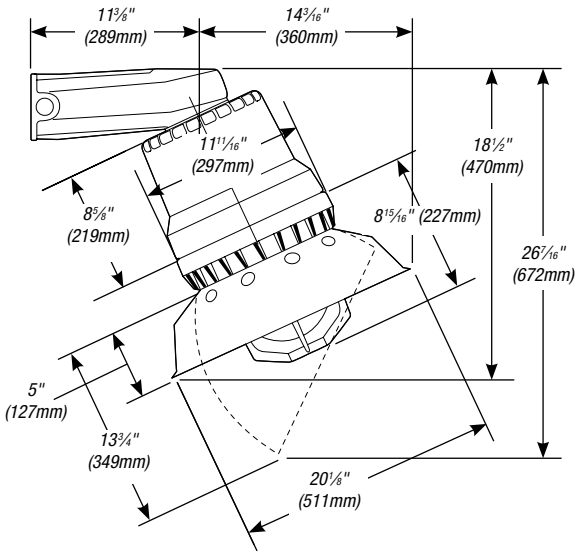

Stanchion Mount with Globe, Guard and Reflector

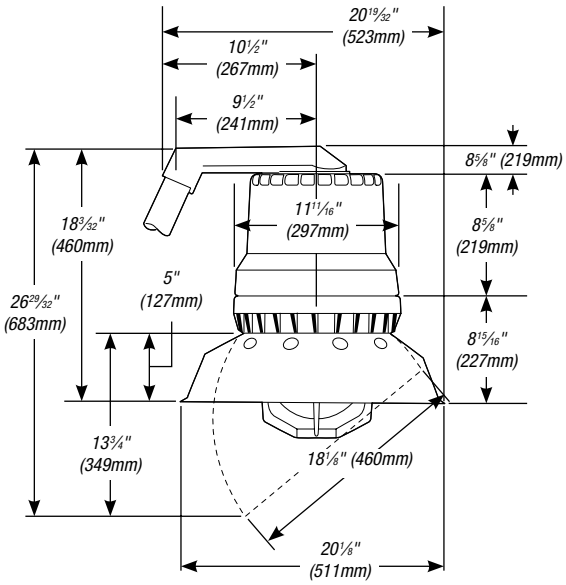

Pendant Mount with Globe and Guard

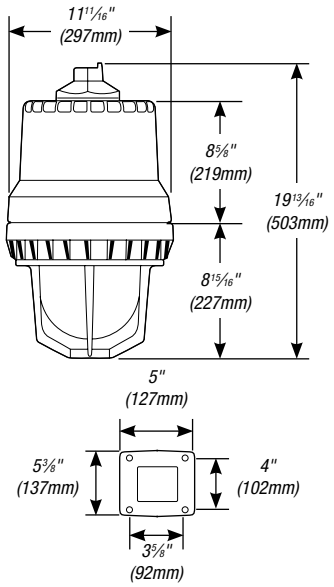

Wall Mount with Globe and Guard

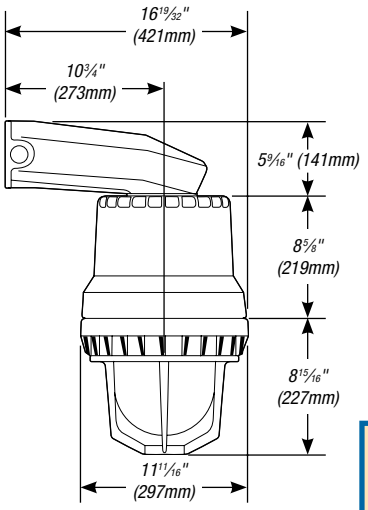

Ceiling Mount with Globe and Guard

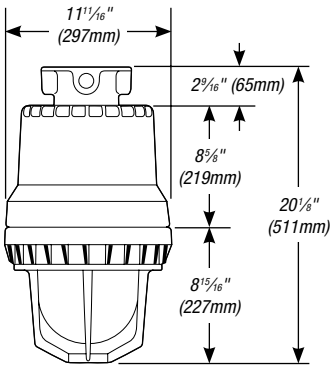

Class I — Division 1, Groups C and D
— Zone 2, Groups IIC, IIB and IIA
— Division 2, Groups A, B, C and D
Class II — Division 1 and 2, Groups E, F and G

- UL® Listed (UL1598A) for Marine Locations
- UL844
- NEMA 4X, IP66

Contact your Thomas & Betts sales representative to verify classification.

United States
Tel: 901.252.8000
800.816.7809
Fax: 901.252.1354

Technical Services
Tel: 888.862.3289

www.tnb.com

Area Lighting — Hazlux® 5 Class I, Div 1

Pendant Mount with Globe, Guard and Reflector

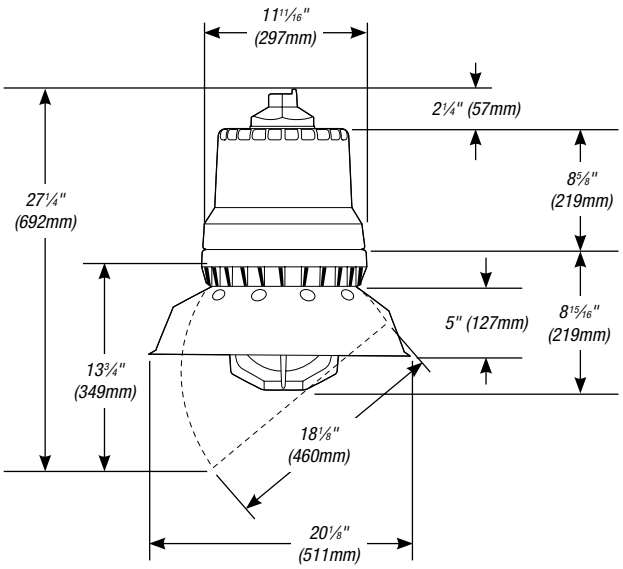

Wall Mount with Globe, Guard and Reflector

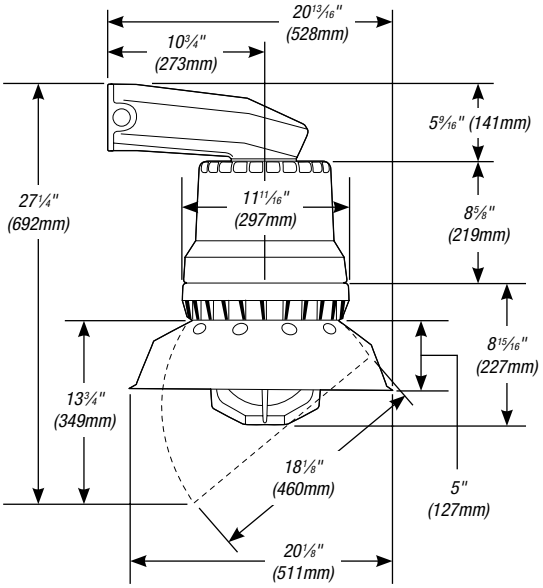

Ceiling Mount with Globe, Guard and Reflector

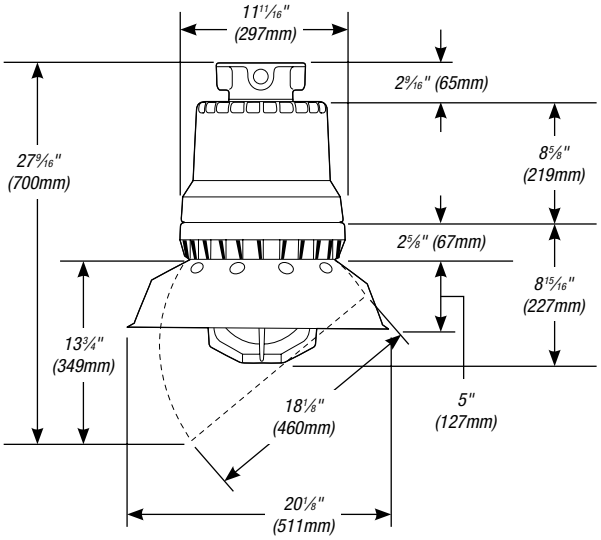

Bulkhead Mount with Globe and Guard

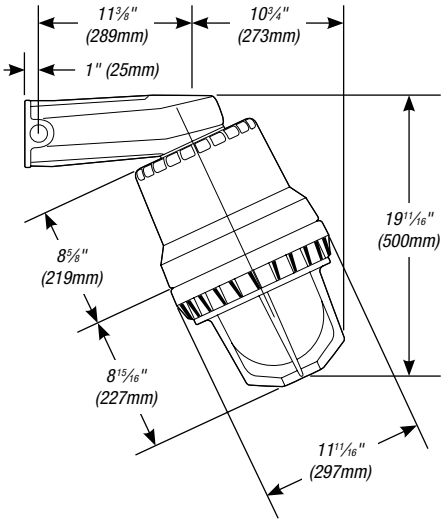

Area Lighting — Hazlux® 5 Class I, Div 1

Hazlux® 5 Fixture (400 Series) Dimensions

Wall Mount with Globe, Guard and Reflector

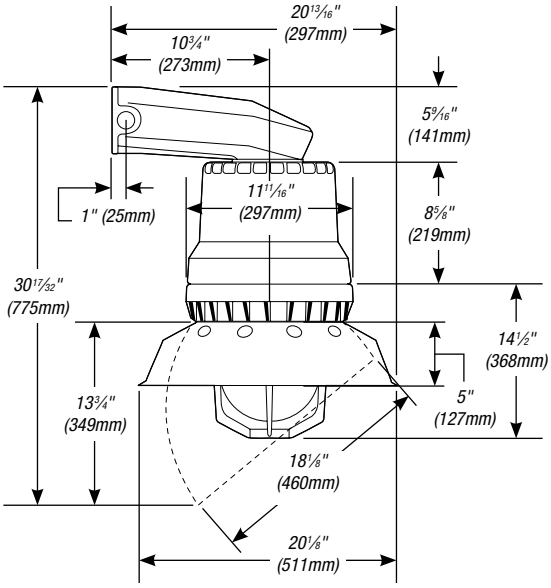

Ceiling Mount with Globe, Guard and Reflector

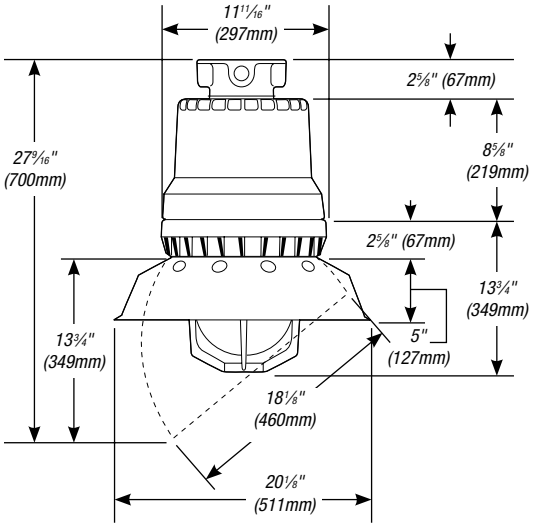

Stanchion Mount with Globe, Guard and Reflector

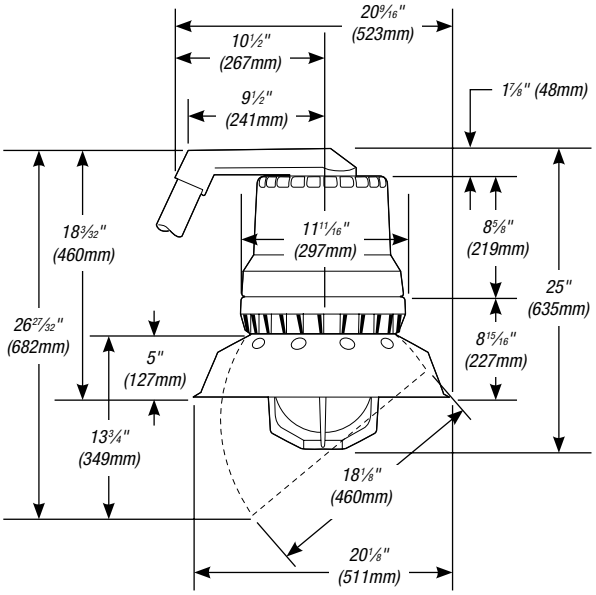

Pendant Mount with Globe and Guard

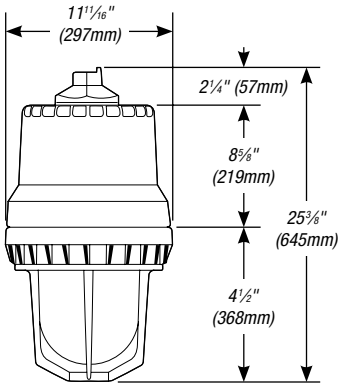

Class I — Division 1, Groups C and D
— Zone 2, Groups IIC, IIB, IIA
— Division 2, Groups A, B, C and D
Class II — Division 1 and 2, Groups E, F and G

- UL® Listed (UL1598A) for Marine Locations
- UL844
- NEMA 4X, IP66

Contact your Thomas & Betts sales representative to verify classification.

Thomas&Betts

United States
Tel: 901.252.8000
800.816.7809
Fax: 901.252.1354

Technical Services
Tel: 888.862.3289

www.tnb.com

Area Lighting — Hazlite® M5 Class I, Div 1

Hazlite® M5
Fixture Assembly Guide

Mounting Style

Pendant Mount

Stanchion Mount

Ceiling Mount

Wall Mount

Bulkhead Mount

Tank

Globe

Guard

Cast Guard

Reflector

Standard Dome

30° Angle Reflector

Area Lighting — Hazlite® M5 Class I, Div 1

Hazlite® M5 Fixture Catalog Numbering System

Class I — Division 1, Groups C and D
— Zone 2, Groups IIC, IIB, IIA
— Division 2, Groups E, F and G
Class II — Division 1 and 2, Groups E, F and G

- UL Listed (UL1598A) for Marine Locations
- UL 844
- NEMA 4X, IP66

Contact your Thomas & Betts sales representative to verify classification.

High-Pressure Sodium

X	S	M	35	P	12	-	0	-	G	-	C2	-	E	4
1	2	3	4	5	6		7		8		9		11	12

Incandescent

X	I	M	15	12	0	G	-	C2	-	E	4
1	2	3	4	6	7	8		9		11	12

Fluorescent

X	F	M	18	P	12	0	-	G	-	C2	E	4
1	2	3	4	5	6	7		8		9	11	12

1 Fixture Series
- **X =** Hazlite® M5 Fixture

2 Lamp Type
- **S =** High-Pressure Sodium
- **F =** Fluorescent
- **I =** Incandescent

3 Lampholder Type
- **M =** Standard Fixture (Without Options)

4 Lamp Wattage
- **09 =** 9 Watt (Fluorescent)
- **13 =** 13 Watt (Fluorescent)
- **18 =** 18 Watt (Fluorescent)
- **26 =** 26 Watt (Fluorescent)
- **03 =** 35 Watt (HPS)
- **05 =** 50 Watt (HPS)
- **07 =** 70 Watt (HPS)
- **10 =** 100 Watt (HPS/Incandescent)
- **15 =** 150 Watt (HPS/Incandescent)

5 Ballast Circuit
- **P =** Reactor Type (HPS and Fluorescent)

6 Voltage/Frequency
- **12 =** 120 Volt

7 Tank
- **0 =** Standard Housing (150W HPS, 250W MH)
- **S =** Standard Housing with Stainless Steel Inserts

8 Optics and Guards
- **G =** Cast Guard (Omit "G" if Guard is Not Required)

9 Mounting Style
- **P2 =** ¾" Rigid Pendant
- **P3 =** 1" Rigid Pendant
- **C2 =** ¾" Ceiling
- **C3 =** 1" Ceiling
- **B2 =** ¾" Wall
- **B3 =** 1" Wall
- **J2 =** ¾" Bulkhead
- **J3 =** 1" Bulkhead
- **S4 =** 25° Angle 1¼" Stanchion
- **S5 =** 25° Angle 1½" Stanchion

10 Special Options
- **T =** HazCote® Custom Corrosion Coating on All Aluminum Parts (Consult Factory)
- **PS =** Paint Spray Label

11 UNIPAK® Options
- **D =** UNIPAK® with Diffused Coated Lamp
- **E =** UNIPAK® with Clear Lamp

12 Reflector Options
- **4 =** Dome Reflector
- **5 =** Angle Reflector

13 CSA Certification
- **C =** CSA Nameplate

Thomas&Betts

United States
Tel: 901.252.8000
800.816.7809
Fax: 901.252.1354

Technical Services
Tel: 888.862.3289

www.tnb.com

Area Lighting — Hazlite® M5 Class I, Div 1

Mounting Options

Pendant Mount

Stanchion Mount

Ceiling Mount

Wall Mount

Bulkhead Mount

CAT. NO.	DESCRIPTION	CONDUIT HUB SIZE	STD. PKG.
XP2	Pendant Mount	¾"	1
XP3		1"	1
XS4	Stanchion Mount	1¼"	1
XS5		1½"	1

Outlet Boxes include female electrical connectors and appropriate close-up plugs.

CAT. NO.	DESCRIPTION	CONDUIT HUB SIZE	STD. PKG.
XC2	Ceiling Mount	¾"	1
XC3		1"	1
XB2	Wall Mount	¾"	1
XB3		1"	1
XJ2	Bulkhead Mount	¾"	1
XJ3		1"	1

Guards

CAT. NO.	DESCRIPTION
XGU15	Cast Aluminum, Powder Finish

Replacement Globe Assemblies

CAT. NO.	DESCRIPTION
XGSA15	Replacement Globe Assembly, 35–150 Watts

Reflectors

Standard Dome

30° Angle Reflector

CAT. NO.	DESCRIPTION
VR15P	Standard Dome Fiberglass-Reinforced Polyester
VRA15P	30° Angle Reflector Fiberglass-Reinforced Polyester

Area Lighting — Hazlite® M5 Class I, Div 1

Hazlite® M5 Fixture Dimensions

Rigid Pendant Globe/Guard

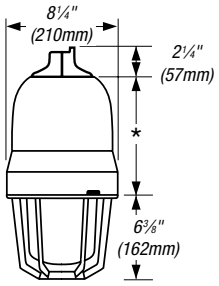

Ceiling Mount Globe/Guard

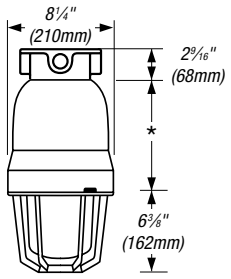

Ceiling Mount Globe/Guard with Dome Reflector

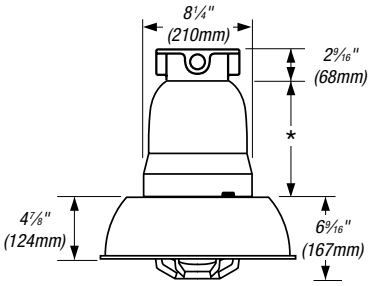

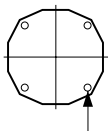

Four ⅜" (9.5mm) diameter holes on a 6" (152mm) diameter B.C.

Stanchion Mount Globe/Guard

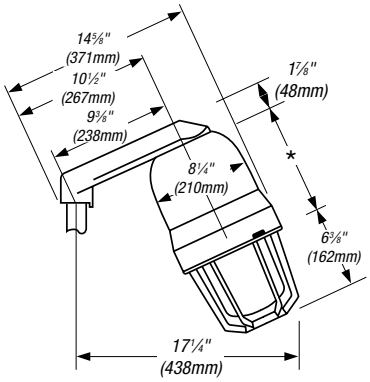

Wall Mount Globe/Guard with 30° Angle Reflector

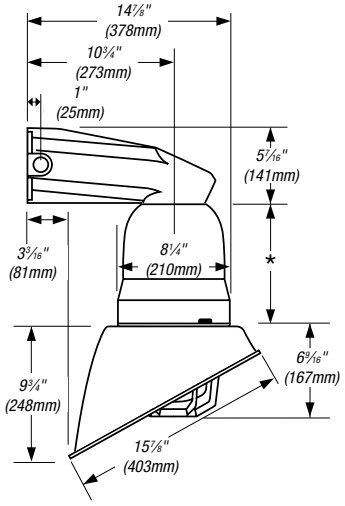

Stanchion Mount Globe/Guard with 30° Angle Reflector

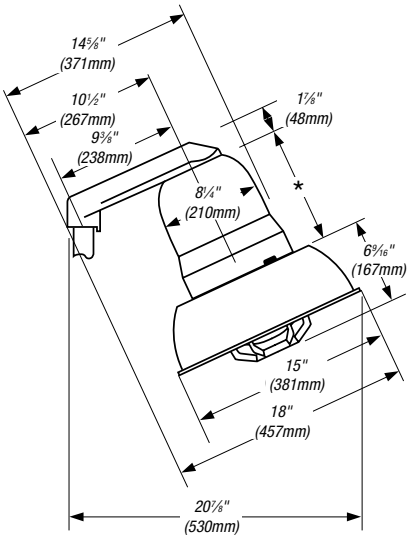

** Tank Dimension: HPS 9"/229mm; Incandescent and Fluorescent 5¹¹⁄₁₆"/144mm.*

Class I — Division 1, Groups C and D
— Zone 2, Groups IIC, IIB, IIA,
— Division 2, Groups A, B, C and D

Class II — Division 1 and 2, Groups E, F and G

- UL® Listed (UL1598A) for Marine Locations
- UL844
- NEMA 4X, IP66

Contact your Thomas & Betts sales representative to verify classification.

Thomas&Betts

United States
Tel: 901.252.8000
800.816.7809
Fax: 901.252.1354

Technical Services
Tel: 888.862.3289

www.tnb.com

Area Lighting — Hazlite® M4 Class I, Div 2

Hazardous Location Fixtures for Class I, Division 2; Class II; and Wet and Marine Locations.

Hazlite® M4 Fixtures

Hazlite® M4 lighting fixtures have a compact, low-profile design that is ideally suited for areas where space or fixture weight is restricted. While it is available for use with both incandescent and fluorescent lamps, the Hazlite® M4 fixture with fluorescent lamps is particularly energy efficient.

- Easy-to-assemble, modular construction
- Fully threaded glass globes, refractors and silicone rubber gaskets seal out dirt, dust and moisture
- Bright white FRP material reflectors optimize light output and resist corrosion and abuse
- Clear glass globes are standard; tempered globes, coloredglass globes and plastic globes are also available
- 1¾"-deep boxes are standard on ceiling and wall mount fixtures; 3"-deep boxes available for added wiring room
- Four mounting styles — pendant, ceiling, wall, angle stanchion — to meet all mounting needs
- Polycarbonate guards are corrosion and impact resistant and do not interfere with globe seal
- Incandescent
  - Two basic sizes cover all popular wattages up to 300 watts
- Fluorescent
  - Factory-wired integral ballasts for easy installation
  - 10,000-hour rated lamp life — extremely energy efficient
  - One or two 13-, 22- and 28-watt lamps provide up to 44 watts of fluorescent light
  - 22-, 28- and 44-watt fixtures start and operate reliably in coldtemperature applications (-29° C)

Hazlite® M4 Incandescent Lighting Fixture Certification Guide

Temperature Ratings

MAXIMUM LAMP WATTS	WITHOUT REFLECTOR	WITH REFLECTOR
150	T2A	T2
300	T1	T1

Class I — Division 2, Groups A, B, C and D
Class II — Division 2, Groups E, F, and G‡
- Enclosed and Gasketed for Wet Locations
- UL® Listed (UL1598A) for Marine Locations
- NEMA 4X, IP66

Contact your Thomas & Betts sales representative to verify classification.
‡ Pendant mount only, 100 watts max.

Hazlite® M4 Compact Fluorescent Lighting Fixture Certification Guide

Class I — Division 2, Groups A, B, C and D
Class II — Division 2, Groups E, F, and G‡
- UL844
- Enclosed and Gasketed for Wet Locations
- NEMA 4X, IP66

Contact your Thomas & Betts sales representative to verify classification.
‡ Pendant mount only

Hazlite® M4 Temperature Information Chart

FIXTURE WATTAGE	AMBIENT TEMPERATURE MINIMUM	AMBIENT TEMPERATURE MAXIMUM	SUPPLY WIRE TEMPERATURE	CLASS I, DIVISION 2 T-NUMBER GLOBE, GUARD	CLASS I, DIVISION 2 T-NUMBER GLOBE, GUARD & REFLECTOR
13 Watt	0° C (32° F)	40° C (104° F)	110° C	T3	T3
22 Watt	-29° C (-20° F)	40° C (104° F)	110° C	T3	T3
26 Watt	0° C (32° F)	40° C (104° F)	110° C	T3	T3
28 Watt	-29° C (-20° F)	40° C (104° F)	110° C	T3	T3
44 Watt	-29° C (-20° F)	40° C (104° F)	110° C	T3	T3

Area Lighting — Hazlite® M4 Class I, Div 2

Hazlite® M4 Incandescent Fixture Assembly Guide

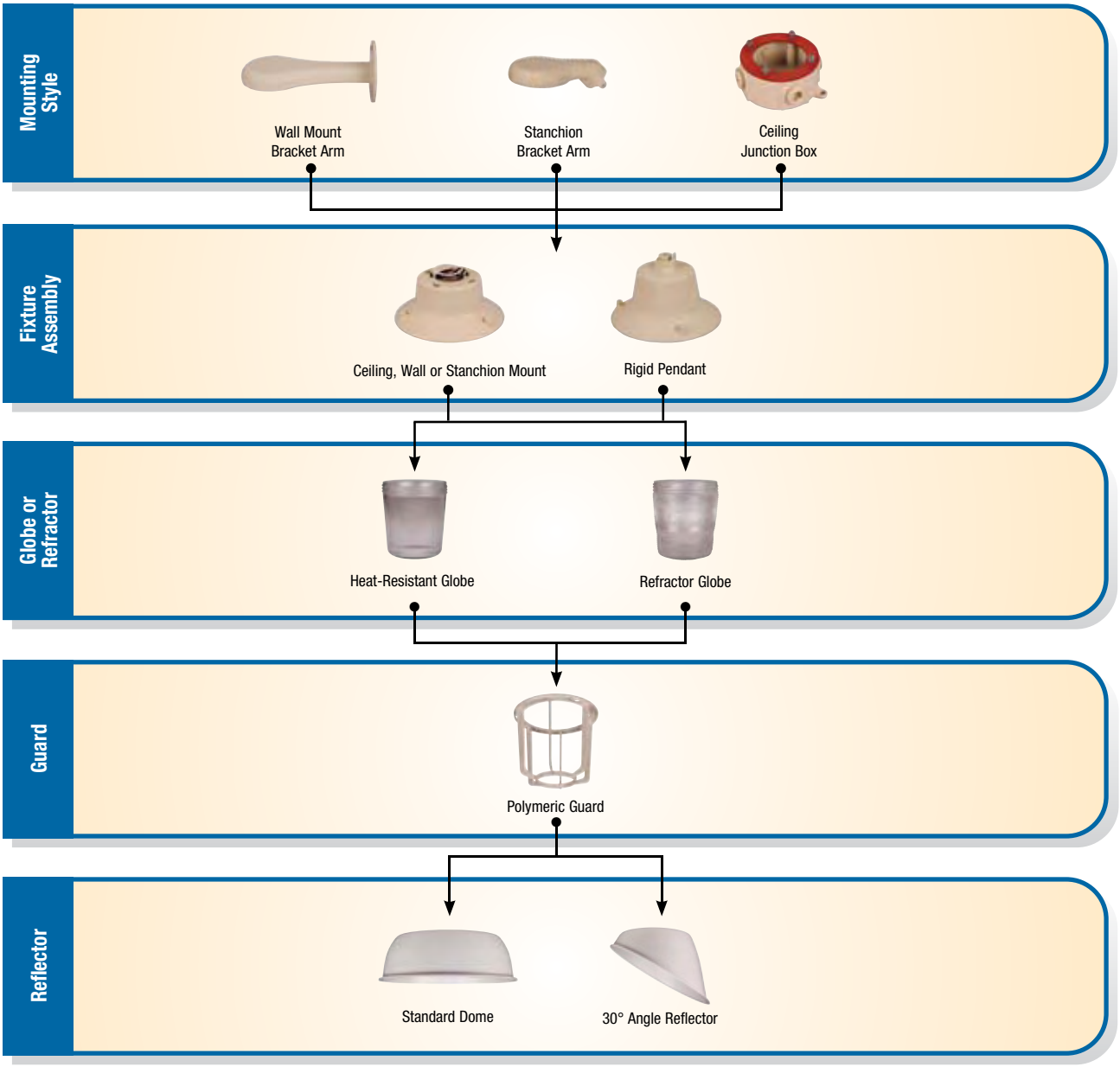

Thomas&Betts

United States
Tel: 901.252.8000
800.816.7809
Fax: 901.252.1354

Technical Services
Tel: 888.862.3289

www.tnb.com

Area Lighting — Hazlite® M4 Class I, Div 2

Hazlite® M4 Incandescent Fixture Catalog Numbering System

VDA	2	5	GP	RD
1	2	3	4	5

1 Fixture Series and Mounting Style

- **VDA =** M4 Incandescent Pendant Mount Fixture
- **VXH =** M4 Incandescent Fixture Body for Ceiling, Wall or Stanchion Mount
- **VXHA =** M4 Incandescent Stanchion Mount Fixture
- **VXHB =** M4 Incandescent Wall Mount Fixture (No Box)
- **VXHBF =** Wall Mount Fixture with Box
- **VXHF =** Ceiling Mount with Box

2 Hub Size

- **2 =** ¾" in. NPT Hub
- **4 =** 1¼" in. NPT Hub

3 Lamp Wattage

- **5 =** 150 Watt Maximum
- **2 =** 200 to 300 Watt

4 Optics and Guards

- **GP =** Clear Globe and Polymeric Guard
- **TG =** Tempered Glass Globe
- **TGP =** Tempered Glass Globe and Polymeric Guard
- **ACG =** Amber Glass Globe
- **BCG =** Blue Glass Globe
- **GCG =** Green Glass Globe
- **RCG =** Red Glass Globe
- **ACGP =** Amber Glass Globe and Polymeric Guard
- **BCGP =** Blue Glass Globe and Polymeric Guard
- **GCGP =** Green Glass Globe and Polymeric Guard
- **RCGP =** Red Glass Globe and Polymeric Guard
- **R1 =** Type I Threaded Glass Refractor*
- **R3 =** Type III Threaded Glass Refractor*
- **R5 =** Type V Threaded Glass Refractor*

**150 Watt maximum*

5 Reflector Options

- **RD =** Dome Reflector
- **RA =** Angle Reflector

Class I — Division 2, Groups A, B, C and D
Class II — Division 2, Groups E, F, and G‡

- Enclosed and Gasketed for Wet Locations
- UL® Listed (UL1598A) for Marine Locations
- NEMA 4X, IP66

Contact your Thomas & Betts sales representative to verify classification.
‡ Pendant mount only, 100 watts max.

Area Lighting — Hazlite® M4 Class I, Div 2

Mounting Options

VXB Wall Mount Bracket Arm

VXA4 Stanchion Bracket Arm

CAT. NO.	CONDUIT HUB SIZE
VXB	N/A
VXA4	1¼"

Fixture Assembly

VDA Pendant Mount

VXH Ceiling, Wall or Stanchion Mount

CAT. NO.	WATT MAX. LAMP SIZE	CONDUIT HUB SIZE
Pendant Mount		
VDA15	150W	½"
VDA25	150W	¾"
VDA12	200–300W	½"
VDA22	200–300W	¾"
Ceiling, Wall or Stanchion Mount		
VXH15	150W	N/A
VXH12	200–300W	N/A

Junction Box for Wall or Ceiling

1¾" Inside Depth

CAT. NO. 4 HUBS	CAT. NO. 5 HUBS	CONDUIT HUB SIZE
VXF10	VXFT10	½"
VXF20	VXFT20	¾"

Covers and Gaskets

Cover

Gasket

CAT. NO.	DESCRIPTION	CONDUIT HUB SIZE
VHC2	Fixture Hanger Hub Cover for VXF and VXFD Boxes	¾"
GASK643	Gasket for Hub Covers, Flat Covers and Bracket Arms	N/A

Glass Globes

Clear, Heat Resistant

Red

Green

Blue

Amber

CAT. NO. 150W MAX. LAMP SIZE	CAT. NO. 200–300W MAX. LAMP SIZE	DESCRIPTION
VGT15	VGT22	Clear, Heat Resistant
VGT15R	VGT22R	Red
VG15G	VGT22G	Green
VGT15B	VGT22B	Blue
VGT15A	VGT22A	Amber

Reflectors

Standard Dome

30° Angle Reflector

CAT. NO. 150W MAX. LAMP SIZE	CAT. NO. 200–300W MAX. LAMP SIZE	DESCRIPTION
VR15P	VR22P	Dome
VRA15P	VRA22P	Angled

Guards

Polymeric Guard

CAT. NO. 150W MAX. LAMP SIZE	CAT. NO. 200–300W MAX. LAMP SIZE	DESCRIPTION
VGU15P	VGU22P	Polymeric Guard

United States
Tel: 901.252.8000
800.816.7809
Fax: 901.252.1354

Technical Services
Tel: 888.862.3289

www.tnb.com

Area Lighting — Hazlite® M4 Class I, Div 2

Hazlite® M4 Incandescent Fixture Dimensions

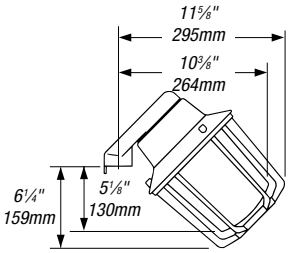

Angle Stanchion Mount
150 Watts Maximum

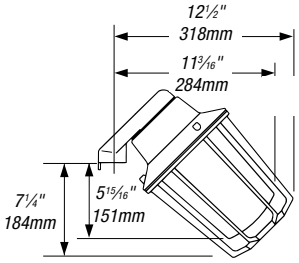

Angle Stanchion Mount
300 Watts Maximum
and Fluorescent

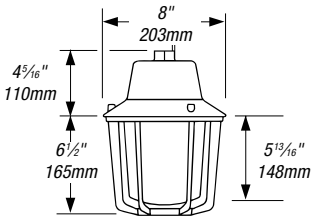

Pendant Mount
150 Watts Maximum

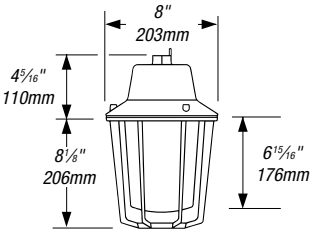

Pendant Mount
300 Watts Maximum
and Fluorescent

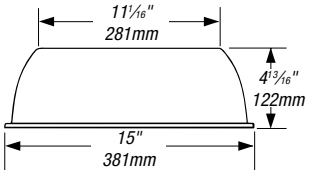

Dome Reflector
150 Watts Maximum

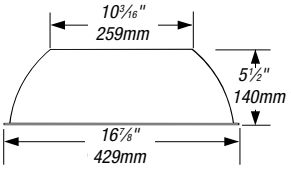

Dome Reflector
300 Watts Maximum
and Fluorescent

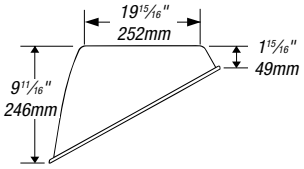

Angle Dome
150 Watts Maximum

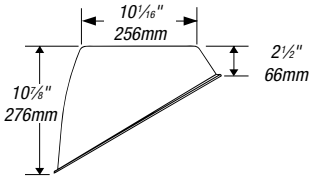

Angle Reflector
300 Watts Maximum
and Fluorescent

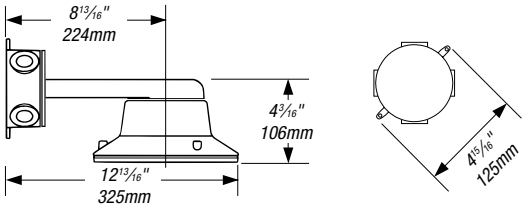

Wall Mount with Box

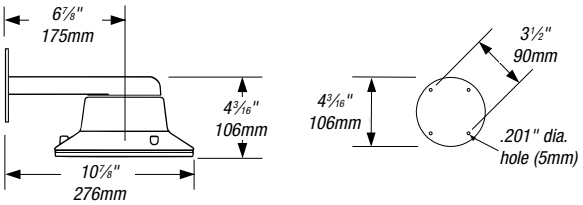

Wall Mount without Box

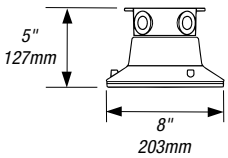

Ceiling Mount

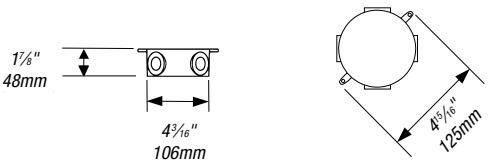

Junction Box for Wall or Ceiling Mount

Class I — Zone 2, Groups IIC, IIB, IIA
— Division 2, Groups A, B, C and D
Class II — Division 1, Groups E, F and G

- Enclosed and Gasketed for Wet Locations
- UL® Listed (UL1598A) for Marine Locations
- NEMA 4X, IP66

Contact your Thomas & Betts sales representative to verify classification.

Area Lighting — Hazlite® M4 Class I, Div 2

Hazlite® M4 Fluorescent Fixture Assembly Guide

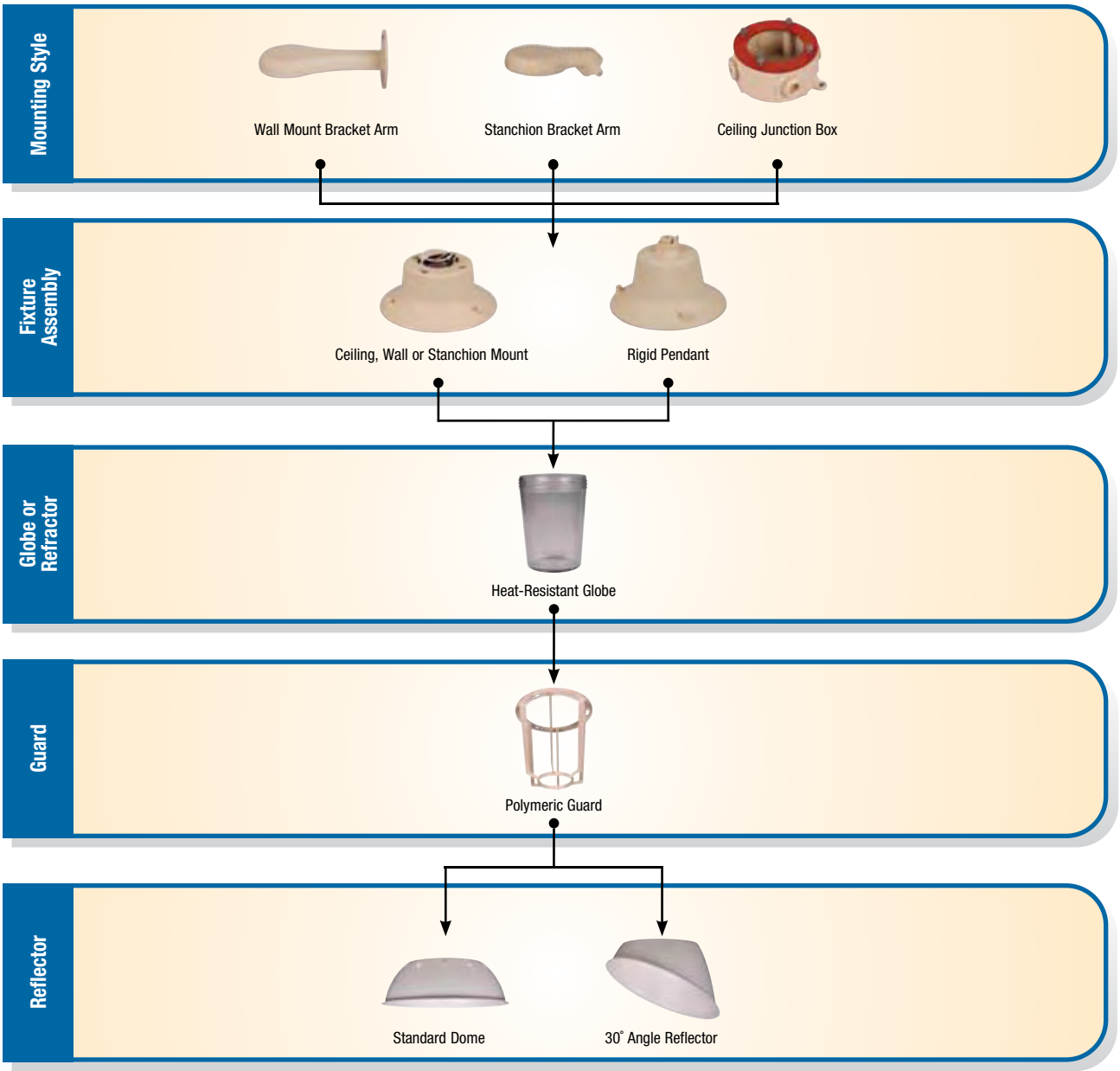

Thomas&Betts

United States
Tel: 901.252.8000
800.816.7809
Fax: 901.252.1354

Technical Services
Tel: 888.862.3289

www.tnb.com

Area Lighting — Hazlite® M4 Class I, Div 2

Hazlite® M4 Fluorescent Fixture Catalog Numbering System

VFHA	2	44	12	-	GP	RD	D
1	2	3	4		5	6	7

1 Fixture Series and Mounting Style

- **VFA =** M4 Fluorescent Pendant Mount
- **VFH =** M4 Fluorescent Body for Ceiling, Wall or Stanchion Mount (No Box)
- **VFHA =** M4 Fluorescent Stanchion Mount
- **VFHB =** M4 Fluorescent Wall Mount (No Box)
- **VFHBF =** M4 Fluorescent Wall Mount (Std. Box)
- **VFHF =** M4 Fluorescent Ceiling Mount (Std. Box)

2 Hub Size

- **1 =** ½" NPT Hub (Except VFH and VFHB)
- **2 =** ¾" NPT Hub
- **4 =** 1¼" NPT Hub

3 Lamp Wattage

- **13 =** 13 Watt (One 13W Lamp)
- **22 =** 22 Watt (One 22W Lamp)
- **26 =** 26 Watt (Two 13W Lamps)
- **28 =** 28 Watt (One 28W Lamp)
- **44 =** 44 Watt (Two 22W Lamps)

4 Voltage

- **12 =** 120VAC

5 Optics and Guards

- **GP =** Clear Globe and Polymeric Guard
- **TG =** Tempered Glass Globe
- **TGP =** Tempered Glass Globe and Polymeric Guard
- **ACG =** Amber Glass Globe*
- **BCG =** Blue Glass Globe*
- **GCG =** Green Glass Globe*
- **RCG =** Red Glass Globe*
- **ACGP =** Amber Glass Globe and Polymeric Guard*
- **BCGP =** Blue Glass Globe and Polymeric Guard*
- **GCGP =** Green Glass Globe and Polymeric Guard*
- **RCGP =** Red Glass Globe and Polymeric Guard*

UL® Listing pending on colored globes.

6 Reflector Options

- **RD =** Dome Reflector
- **RA =** Angle Reflector

7 Packaging Options

- **D =** UNIPAK® Packaging (Completely Assembled with Lamps in One Carton)
- **P =** PROJECPAK® Packaging (All Components, Including Lamp(s), in One Carton, Unassembled)

***Note**: If no packaging code is specified, fixture components will be shipped in separate cartons. All fixtures and fixture housings include lamps.*

Class I — Zone 2, Groups IIC, IIB, IIA,
— Division 2, Groups A, B, C and D
Class II — Division 1, Groups E, F and G

- Enclosed and Gasketed for Wet Locations
- UL844
- NEMA 4X, IP66

Contact your Thomas & Betts sales representative to verify classification.

Area Lighting — Hazlite® M4 Class I, Div 2

Mounting Options

VXB Wall Mount Bracket Arm

VXA4 Stanchion Bracket Arm

CAT. NO.	CONDUIT HUB SIZE
VXB	N/A
VXA4	1¼"

Fixture Assembly

VFH Ceiling, Wall or Stanchion Mount

VFA Pendant Mount

CAT. NO.	CONDUIT HUB SIZE
VFH	N/A
VFA	½"

Junction Box for Wall or Ceiling

1¾" Inside Depth

CAT. NO. 4 HUBS	CAT. NO. 5 HUBS	CONDUIT HUB SIZE
VXF10	VXFT10	½"
VXF20	VXFT20	¾"

Covers and Gaskets

Fixture Hanger

Gasket

CAT. NO.	DESCRIPTION	CONDUIT HUB SIZE
VHC1	Fixture Hanger	½"
VHC2	Hub Cover for VXF Boxes	¾"
GASK643	Gasket for Hub Covers, Flat Covers and Bracket Arms	N/A

Glass Globes and Exit Sign

Three-Sided Exit Sign

Heat-Resistant Clear Glass Globe

CAT. NO. 150W MAX. LAMP SIZE	CAT. NO. 200–300W MAX. LAMP SIZE	DESCRIPTION
VGT15	VGT22	Clear, Heat Resistant
VGT15R	VGT22R	Red
VG15G	VGT22G	Green
VGT15B	VGT22B	Blue
VGT15A	VGT22A	Amber
VRE22	VRE22	Three-Sided Exit Sign

Reflectors

Standard Dome

30° Angle Reflector

CAT. NO. 150W MAX. LAMP SIZE	CAT. NO. 200–300W MAX. LAMP SIZE	DESCRIPTION
—	VR22P	Dome
—	VRA22P	Angled

Guards

Polymeric Guard

CAT. NO. 150W MAX. LAMP SIZE	CAT. NO. 200–300W MAX. LAMP SIZE	DESCRIPTION
—	VGU22P	Polymeric Guard

United States
Tel: 901.252.8000
800.816.7809
Fax: 901.252.1354

Technical Services
Tel: 888.862.3289

www.tnb.com

Area Lighting — Hazlite® M4 Class I, Div 2

Hazlite® M4 Fluorescent Fixture Dimensions

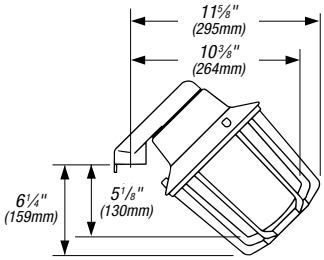

Angle Stanchion Mount
150 Watts Maximum

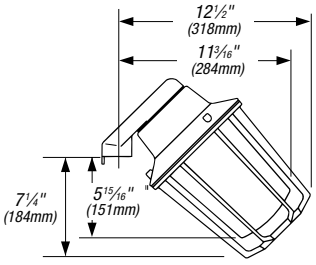

Angle Stanchion Mount
300 Watts Maximum
and Fluorescent

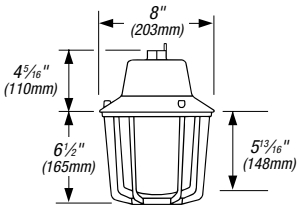

Pendant Mount
150 Watts Maximum

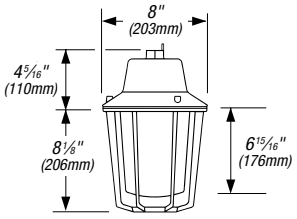

Pendant Mount
300 Watts Maximum
and Fluorescent

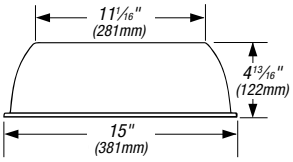

Dome Reflector
150 Watts Maximum

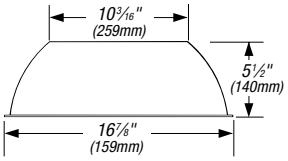

Dome Reflector
300 Watts Maximum
and Fluorescent

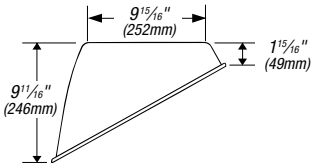

Angle Dome
150 Watts Maximum

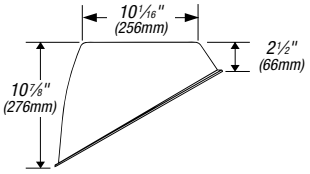

Angle Reflector
300 Watts Maximum
and Fluorescent

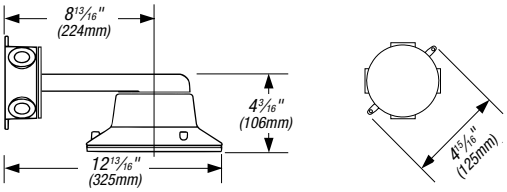

Wall Mount with Box

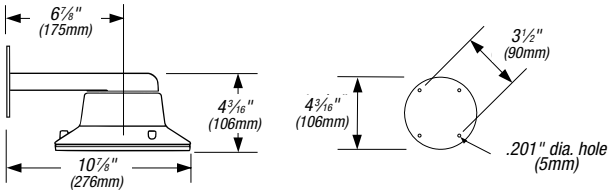

Wall Mount without Box

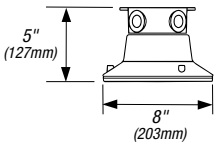

Ceiling Mount

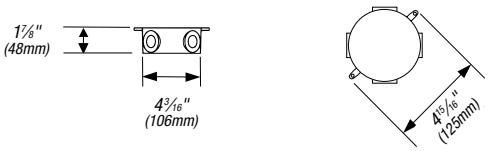

Junction Box for Wall or Ceiling Mount

Class I — Zone 2, Groups IIC, IIB, IIA
— Division 2, Groups A, B, C and D
Class II — Division 1, Groups E, F and G

- Enclosed and Gasketed for Wet Locations
- UL844
- NEMA 4X, IP66

Contact your Thomas & Betts sales representative to verify classification.

Floodlights — Hazlux® 3 Class I, Div 2

Class I, Division 2/Marine-Duty Floodlights

Hazlux® 3 UltraFlood® Floodlights

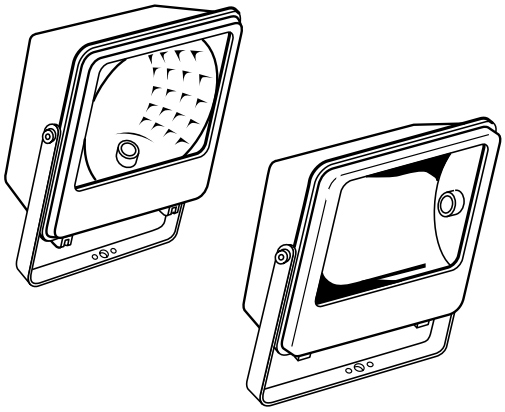

Applications

- Chemical plants
- Oil refineries
- Offshore platforms
- Waste treatment facilities
- Food processing plants
- Steel mills, foundries
- Power plants
- Pulp and paper facilities
- General manufacturing plants
- Shipyards and shipbuilding facilities
- Airplane manufacturing plants
- Defense and government facilities

Features and Benefits

- **Computer-Designed Reflectors —** for optimal light distribution and efficiency
- **Die-Cast Aluminum —** housings and covers for excellent strength, light weight, and corrosion resistance; Marine-duty floodlights are copper-free aluminum alloy
- **Polyester Powder Finish —** provides superior corrosion resistance and attractive appearance
- **Fully Pivoting Steel Yoke —** is standard for ease of aiming and mounting flexibility
- **Tempered Glass Lens —** resists thermal shock and is fully sealed and mechanically retained
- **Hinged Door —** swings down for easy lamp replacement; is easily removable for maintenance
- **Aiming Sight —** is standard on all Hazlux® UltraFlood® floodlights — makes installation faster and easier
- **Lighting Layout Assistance —** at no charge

Wattages, Voltages

- High-Pressure Sodium: 70–1000 watts
- Metal Halide: 175–1000 watts
- All Floodlights: 120, 277, 480 or Multi-tap voltages available

Materials, Finishes

- Housings, Covers: Powder-coated aluminum
- Hardware: Corrosion-resistant steel
- Lens: Tempered glass

Certifications

- Class I, Division 2, Groups A, B, C, D — All (UL844)
- Outdoor Wet Locations — All
- Marine Locations (UL1598A) — FDM Series
- Temperature Range: 70W–400W (All) -30° C to 40° C
  1000W HPS -30° C to 40° C
  1000W MH -30° C to 25° C

Thomas&Betts

United States
Tel: 901.252.8000
800.816.7809
Fax: 901.252.1354

Technical Services
Tel: 888.862.3289

www.tnb.com

Floodlights — Hazlux® 3 Class I, Div 2

Hazlux® 3 UltraFlood® Floodlight Catalog Numbering System

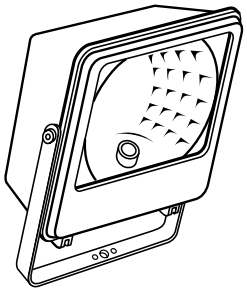

FD	S	0	40	C	48	0	-	Y	W	E	-	FF
1	2	3	4	5	6	7		8	9	10		11

1 Fixture Series
- **FD =** Class I, Division 2, Groups A, B, C, D
- **FDM =** Class I, Division 2, Groups A, B, C, D and Marine Locations*

2 Lamp Type
- **S =** High-Pressure Sodium
- **H =** Metal Halide

3 Starter Type
- **0 =** Standard Starter (HPS)
- **P =** Pulse Start (Metal Halide Only)
- **R =** Instant Restart (HPS)

4 Lamp Wattage
- **10 =** 100 Watts
- **15 =** 150 Watts
- **17 =** 175 Watts
- **20 =** 200 Watts
- **25 =** 250 Watts
- **40 =** 400 Watts
- **00 =** 1000 Watts

5 Ballast Circuit
- **P =** Reactor
- **H =** High Reactance
- **C =** Constant Wattage Autotransformer

6 Voltage
- **04 =** 120/208/277/240VAC (wired to 120VAC)
- **12 =** 120VAC
- **20 =** 208VAC
- **24 =** 240VAC
- **27 =** 277VAC
- **48 =** 480VAC

Contact the factory for other available voltages

7 Housing Size
- **0 =** Standard Housing (400W max.)
- **L =** Large Housing (1000W)

8 Mounting Style
- **Y =** Yoke (Trunnion) Mount

9 Beam Type
- **W =** Wide Beam
- **D =** Narrow Beam (400W max.)

10 Packaging
- **E =** UNIPAK® with Clear Lamp
- **D =** UNIPAK® with Diffuse Lamp

11 Options
- **OF =** Single Fuse
- **FF =** Double Fuse
- **PW =** Pre-Wired with 3½" Cord
- **BRZ =** Bronze Color
- **BLK =** Black Color

Note: *Standard color is gray.*

** Minimum order quantity applies; consult customer service for details.*

Class I — Division 2, Groups A, B, C and D
- UL844
- UL1598A for Marine Locations
- NEMA 4X (FDM Series)
- NEMA 3R

Contact your Thomas & Betts sales representative to verify classification.

Floodlights — Hazlux® 3 Class I, Div 2

Hazlux® 3 UltraFlood® Class I, Div. 2 HID Floodlights for Wet Locations

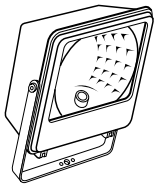

LAMP TYPE	LAMP WATTS	VOLTAGE	YOKE (TRUNNION) MOUNT CAT. NO.	BEAM TYPE†
High-Pressure Sodium	70	120	FDS007P120-YW	Wide
		MT	FDS007H040-YW	
	100	120	FDS010P120-YW	Wide
		MT	FDS010H040-YW	
	150	120	FDS015P120-YW	Wide
		MT	FDS015H040-YW	
	250	120	FDS025C120-YW	Wide
		MT	FDS025C040-YW	
	400	120	FDS040C120-YW	Wide
		MT	FDS040C040-YW	
	1000	120	FDS000C120-YW	Wide
		MT	FDS000C040-YW	
Metal Halide	175	120	FDHP17C120-YW	Wide
		MT	FDHP17C040-YW	
	250	120	FDHP25C120-YW	Wide
		MT	FDHP25C040-YW	
	400	120	FDHP40C120-YW	Wide
		MT	FDHP40C040-YW	
	1000	120	FDHP00C12L-YW	Wide
		MT	FDHP00C04L-YW	

† For narrow-beam floodlights, replace "W" at end of catalog number with "N." Example: FDS040C040-YN.

Ordering Notes:
- *MT indicates multi-tap ballast — 120, 208, 240, 277 volt.*
- *To order 480-volt floodlights, replace "04" in multi-tap catalog number with "48." Example: FDS040C480-YN.*
- *See **below** for other mounting brackets and accessories.*
- *All floodlights for use with mogul base lamps.*

Class I — Division 2, Groups A, B, C, D
- UL844, UL595
- Marine Locations
- Outdoor Wet Locations
- NEMA 3R, NEMA 4X

Yoke-Mount Floodlights — Mounting Brackets

	CAT. NO.	DESCRIPTION
	9901H-TB	Steel Cross-Arm Mounting Bracket
	9902H-TB	Pole-Top Mounting Bracket
	9920H-TB	Universal Wall Mounting Bracket

Accessories

CAT. NO.	DESCRIPTION
75-8-TB	Polycarbonate Vandal Shield
75-V-TB	Glare Control Shield

Integral Slipfitter Floodlights — Mounting Brackets

	CAT. NO.	DESCRIPTION
	9605	Wall Mount Pipe Bracket (2") with Flange (Prime Coated)
	9605-G	Wall Mount Pipe Bracket (2") with Flange (Galvanized)
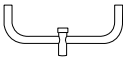	9352-H-TB	Two-Arm Pole-Top Bracket ("Bullhorn")
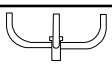	9333-TB	Three-Arm Pole-Top Bracket ("Bullhorn")

United States
Tel: 901.252.8000
800.816.7809
Fax: 901.252.1354

Technical Services
Tel: 888.862.3289

www.tnb.com

Floodlights — Hazlux® 3 Class I, Div 2

Hazlux® 3 UltraFlood® Class I, Div. 2 HID Floodlights for Marine Locations

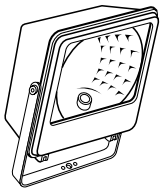

LAMP TYPE	LAMP WATTS	VOLTAGE	YOKE (TRUNNION) MOUNT CAT. NO.	BEAM TYPE†
High-Pressure Sodium	70	120	FDMS007P120-YW	Wide
		MT	FDMS007H040-YW	
	100	120	FDMS010P120-YW	Wide
		MT	FDMS010H040-YW	
	150	120	FDMS015P120-YW	Wide
		MT	FDMS015H040-YW	
	250	120	FDMS025C120-YW	Wide
		MT	FDMS025C040-YW	
	400	120	FDMS040C120-YW	Wide
		MT	FDMS040C040-YW	
	1000	120	FDMS000C120-YW	Wide
		MT	FDMS000C040-YW	
Metal Halide	175	120	FDMHP17C120-YW	Wide
		MT	FDMHP17C040-YW	
	250	120	FDMHP25C120-YW	Wide
		MT	FDMHP25C040-YW	
	400	120	FDMHP40C120-YW	Wide
		MT	FDMHP40C040-YW	
	1000	120	FDMHP00C12L-YW	Wide
		MT	FDMHP00C04L-YW	

† *For narrow-beam floodlights, replace "W" at end of catalog number with "N." Example: FDMS040C040-YN.*

Ordering Notes:
- *MT indicates multi-tap ballast — 120, 208, 240, 277 volt.*
- *To order 480-volt floodlights, replace "04" in multi-tap catalog number with "48." Example: FDMS040C480-YN.*
- *See **previous page** for other mounting brackets and accessories.*
- *All floodlights for use with mogul base lamps.*

Class I — Division 2, Groups A, B, C, D
- UL844, UL595
- Marine Locations
- Outdoor Wet Locations
- NEMA 3R, NEMA 4X

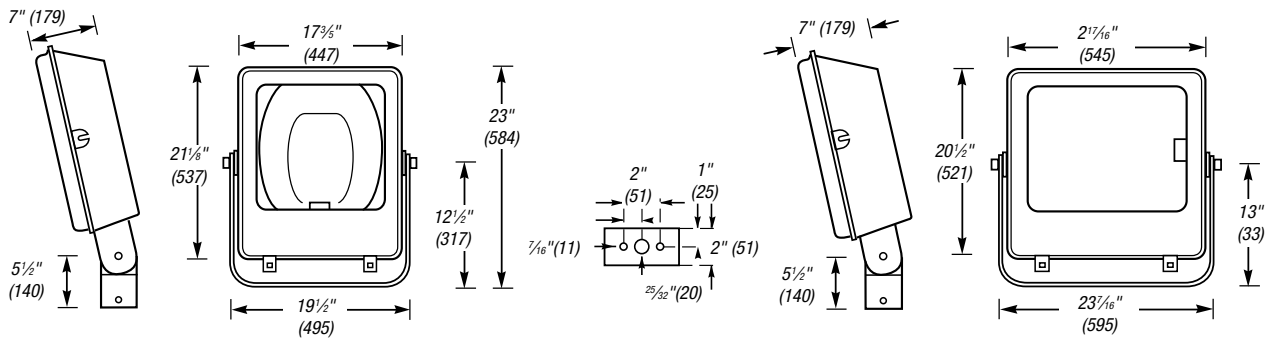

Emergency Lighting — HazBatt® H3 Class I, Div 2

Designed for use in Class I, Division 2 and Class II locations.

HazBatt® H3 Fluorescent Emergency Lighting Systems for Adverse Industrial Locations

Features and Benefits

- **Self Contained —** Lamps, batteries, electronics and AC ballasts are safely enclosed in rugged die-cast aluminum fixture housing
- **Life Safety Code® and OSHA Compliant —** Both lamps operate for at least 90 minutes on emergency battery power
- **UL® Listings —** Broad range of UL924 Listed hazardous-location fluorescent emergency systems
- **Choice of Six Mounting Styles —** Pendant, cone pendant, ceiling, wall, angle stanchion and straight stanchion
- **Continuous or Emergency-Only Operation —** Both lamps operate continuously (on AC, then DC) or only during a power failure — your choice
- **Sealed, Maintenance-Free Ni-Cad Batteries —** Rated for 7–10 years of reliable operation
- **Glass Globe and Polycarbonate Guard —** Provide excellent mechanical and environmental protection for lamps
- **Bright Red Epoxy Finish —** Enables HazBatt® systems to be recognized quickly for maintenance and testing

Typical Applications

- Chemical Plants
- Oil Refineries
- Offshore Platforms
- Waste Treatment Facilities
- Food Processing Plants
- Steel Mills and Foundries
- Power Plants
- Pulp and Paper Facilities
- General Manufacturing Plants
- Shipyards and Shipbuilding Facilities
- Aircraft Manufacturing Plants
- Defense and Government Facilities

Life Safety Code is a trademark of the National Fire Protection Association, Inc.

Electrical Ratings

- Lamps/Wattages: (2) 13-watt fluorescent
- Standard Voltages: 120V (continuous — all)
120/277V (emergency — all)
- Optional Voltages: 208V, 240V (contact your Thomas & Betts representative)

Materials, Finishes

- Ballast Housings: Red epoxy-coated aluminum
- Mounting Covers: Red epoxy-coated aluminum
- Hardware: Stainless steel
- Guard: Polycarbonate plastic
- Reflectors: Fiberglass-reinforced polyester

Certifications

- Class I, Division 2, Groups A, B, C, D (UL844)
- Class II, Division 1, Groups F, G (UL844)
- Emergency Lighting Systems (UL924)
- Marine — Inside Drip-Proof (UL1598A)
- Enclosed and Gasketed, Wet Locations
- Temperature Range: 0° C to 40° C

Certification Guide

HAZARDOUS AREA CLASSIFICATION	CONTINUOUS OPERATION T-NUMBER: AC OPERATION	CONTINUOUS OPERATION T-NUMBER: DC OPERATION	EMERGENCY OPERATION T-NUMBER
Class I, Division 2 T-Number	T2D	T4A	T4A
Class II, Groups F, G T-Number	T6	T6	T6

United States
Tel: 901.252.8000
800.816.7809
Fax: 901.252.1354

Technical Services
Tel: 888.862.3289

www.tnb.com

Emergency Lighting — HazBatt® H3 Class I, Div 2

HazBatt® H3 Fixture Catalog Numbering System

DFE	26	PB	12	V	-	TGL	-	A2	D	-	Z
1	2	3	4	5		6		7	8		9

1 HazBatt® Type/Suitability
- **DFE =** HazBatt® H3 Emergency Lighting System

2 Total Lamp Watts
- **26 =** Two 13-Watt Fluorescent Lamps

3 Battery Ballast Circuit
- **B =** Emergency Operation HazBatt®: Two Emergency Ballasts Only
- **PB =** Continuous Operation HazBatt®: Two Emergency Ballasts plus Two AC Ballasts (120 volt only)

4 Voltage
- **03 =** 120/277 VAC Dual Primary (Emergency Operation Only)
- **12 =** 120 VAC Primary (Emergency or Continuous Operation)
- **27 =** 277 VAC Primary (Emergency Operation Only)

5 Specific Hazardous Suitability
- **V =** Class I, Division 2, Groups A, B, C, D
- **D =** Class II, Division 1, Groups F, G, Class III

6 Optical Assembly Option
- **TGL =** Tempered Glass Globe and Polymeric Guard

7 Mounting Style
- **A2 =** ¾" Cone Pendant
- **B2 =** ¾" Wall
- **B3 =** 1" Wall
- **C2 =** ¾" Ceiling
- **C3 =** 1" Ceiling
- **L4 =** 1¼" 90° Stanchion
- **L5 =** 1½" 90° Stanchion
- **P2 =** ¾" Rigid Pendant
- **P3 =** 1" Rigid Pendant
- **S4 =** 1¼" 25° Stanchion
- **S5 =** 1½" 25° Stanchion

8 UNIPAK® Options
- **D =** UNIPAK® Packaging with Lamps (Standard)

9 Options
- **Z =** Shipped with Explosion-Proof Test Switch Station (Single Button)
- **7 =** Shipped with VRE22 Exit Sign (Not UL® Listed)*

Contact the factory for other available voltages.

** Cannot be used with guard option.*

Class I — Division 2, Groups A, B, C and D
Class II — Division 1, Groups F and G
- UL844, UL1598
- Enclosed and Gasketed, Wet Locations
- Marine — Inside Drip Proof

Contact your Thomas & Betts sales representative to verify classification.

Emergency Lighting — HazBatt® H3 Class I, Div 2

HazBatt® H3 Fluorescent Emergency Lighting Systems

Fixtures for Class I, Division 2, Groups A, B, C, D

	MOUNTING STYLE	SIZE IN	HAZBATT® H3 WITH GLOBE, GUARD		HAZBATT® H3 WITH EXIT SIGN	
			CONTINUOUS OPERATION (120 VAC)‡	EMERGENCY USE ONLY (120/277 VAC)	CONTINUOUS OPERATION (120 VAC)‡	EMERGENCY USE ONLY (120/277 VAC)
	Rigid Pendant	1	DFE26PB12V-TGL-P3D	DFE26B03V-TGL-P3D	DFE26PB12V-TGL-P3D7	DFE26B03V-TGL-P3D7
	Cone Pendant	¾	DFE26PB12V-TGL-A2D	DFE26B03V-TGL-A2D	DFE26PB12V-TGL-A2D7	DFE26B03V-TGL-A2D7
		1	DFE26PB12V-TGL-A3D	DFE26B03V-TGL-A3D	DFE26PB12V-TGL-A3D7	DFE26B03V-TGL-A3D7
	Ceiling	¾	DFE26PB12V-TGL-C2D	DFE26B03V-TGL-C2D	DFE26PB12V-TGL-C2D7	DFE26B03V-TGL-C2D7
		1	DFE26PB12V-TGL-C3D	DFE26B03V-TGL-C3D	DFE26PB12V-TGL-C3D7	DFE26B03V-TGL-C3D7
	Wall	¾	DFE26PB12V-TGL-B2D	DFE26B03V-TGL-B2D	DFE26PB12V-TGL-B2D7	DFE26B03V-TGL-B2D7
		1	DFE26PB12V-TGL-B3D	DFE26B03V-TGL-B3D	DFE26BP12V-TGL-B307	DFE26B03V-TGL-B3D7
	25° Angle Stanchion	1¼	DFE26PB12V-TGL-S4D	DFE26B03V-TGL-S4D	DFE26PB12V-TGL-S4D7	DFE26B03V-TGL-S4D7
		1½	DFE26PB12V-TGL-S5D	DFE26B03V-TGL-S5D	DFE26PB12V-TGL-S5D7	DFE26B03V-TGL-S5D7
	90° Stanchion	1¼	DFE26PB12V-TGL-L4D	DFE26B03V-TGL-L4D	DFE26PB12V-TGL-L4D7	DFE26B03V-TGL-L4D7
		1½	DFE26PB12V-TGL-L5D	DFE26B03V-TGL-L5D	DFE26PB12V-TGL-L5D7	DFE26B03V-TGL-L5D7

***Notes**: To specify HazBatt® H3 to be shipped with test switch station suitable for use in Class I, Division 2 location, add "Z" to the end of the catalog number. Example: DFE26PB12V-TGL-B2DZ*

All HazBatt® H3 fixtures include lamps.

‡ Contact the factory for other voltages.

All HazBatt® fixtures include globe and guard.

R576124176
Explosion-Proof Test Switch Station

Class I — Division 2, Groups A, B, C, D
Class II — Division 1, Groups F, G
- UL844, UL1598
- Enclosed and Gasketed, Wet Locations
- Marine — Inside Drip Proof

Contact your Thomas & Betts sales representative to verify classification.

Fixtures for Class II, Division 1, Groups F, G, Class III

	MOUNTING STYLE	SIZE IN	HAZBATT® H3 WITH GLOBE, GUARD		HAZBATT® H3 WITH EXIT SIGN	
			CONTINUOUS OPERATION (120 VAC)‡	EMERGENCY USE ONLY (120/277 VAC)	CONTINUOUS OPERATION (120 VAC)‡	EMERGENCY USE ONLY (120/277 VAC)
	Rigid Pendant	¾	DFE26PB12D-TGL-P2D	DFE26B03D-TGL-P2D	DFE26PB12D-TGL-P2D7	DFE26B03D-TGL-P2D7
		1	DFE26PB12D-TGL-P3D	DFE26B03D-TGL-P3D	DFE26PB12D-TGL-P3D7	DFE26B03D-TGL-P3D7
	Cone Pendant	¾	DFE26PB12D-TGL-A2D	DFE26B03D-TGL-A2D	DFE26PB12D-TGL-A2D7	DFE26B03D-TGL-A2D7
		1	DFE26PB12D-TGL-A3D	DFE26B03D-TGL-A3D	DFE26PB12D-TGL-A3D7	DFE26B03D-TGL-A3D7
	Ceiling	¾	DFE26PB12D-TGL-C2D	DFE26B03D-TGL-C2D	DFE26PB12D-TGL-C2D7	DFE26B03D-TGL-C2D7
		1	DFE26PB12D-TGL-C3D	DFE26B03D-TGL-C3D	DFE26PB12D-TGL-C3D7	DFE26B03D-TGL-C3D7
	Wall	¾	DFE26PB12D-TGL-B2D	DFE26B03D-TGL-B2D	DFE26PB12D-TGL-B2D7	DFE26B03D-TGL-B2D7
		1	DFE26PB12D-TGL-B3D	DFE26B03D-TGL-B3D	DFE26BP12D-TGL-B3D7	DFE26B03D-TGL-B3D7
	25° Angle Stanchion	1¼	DFE26PB12D-TGL-S4D	DFE26B03D-TGL-S4D	DFE26PB12D-TGL-S4D7	DFE26B03D-TGL-S4D7
		1½	DFE26PB12D-TGL-S5D	DFE26B03D-TGL-S5D	DFE26PB12D-TGL-S5D7	DFE26B03D-TGL-S5D7
	90° Stanchion	1¼	DFE26PB12D-TGL-L4D	DFE26B03D-TGL-L4D	DFE26PB12D-TGL-L4D7	DFE26B03D-TGL-L4D7
		1½	DFE26PB12D-TGL-L5D	DFE26B03D-TGL-L5D	DFE26PB12D-TGL-L5D7	DFE26B03D-TGL-L5D7

***Notes**: To specify HazBatt® H3 to be shipped with test switch station suitable for use in Class I, Division 2 location, add "Z" to the end of the catalog number. Example: DFE26PB12V-TGL-B2DZ*

All HazBatt® H3 fixtures include lamps.

‡ Contact the factory for other voltages.

United States
Tel: 901.252.8000
800.816.7809
Fax: 901.252.1354

Technical Services
Tel: 888.862.3289

www.tnb.com

Emergency Lighting — HazBatt® H3 Class I, Div 2

Mounting Options

Wall Mount

HazVertor® Ring

Flexible Pendant

25° Angle Stanchion

Rigid Pendant

Ceiling Mount

Straight Stanchion

Cone Pendant

CAT. NO.	DESCRIPTION	CONDUIT HUB SIZE
VP2-RED VP3-RED	Rigid Pendant	¾" 1"
VA2-RED VA3-RED	Cone Pendant	¾" 1"
VF2-RED VF3-RED	Flexible Pendant	¾" 1"
VC2-RED VC3-RED	Ceiling Mount	¾" 1"
VB2-RED VB3-RED	Wall Mount	¾" 1"
VS4-RED VS5-RED	25° Angle Stanchion	¾" 1"
VL4-RED VL5-RED	Straight Stanchion	¾" 1"
HV1	HazVertor® Ring for Class I, Div. 2 Requirements	—
HV2	HazVertor® Ring for Class II Requirements	—

Glass Globe and Exit Sign

Heat-Resistant Globe

CAT. NO.	DESCRIPTION
VGT22	5½" dia. Clear, Heat-Resistant
VRE22	Three-Sided Exit Sign

Three-Sided Exit Sign

Reflectors

Standard Dome

30° Angle Reflector

CAT. NO.	DESCRIPTION
VR22P	Dome Reflector
VRA22P	30° Angle Reflector

Guard

Polymeric Guard

CAT. NO.	DESCRIPTION
VGU22P-RED	Polymeric Guard

Dimensions

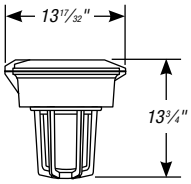

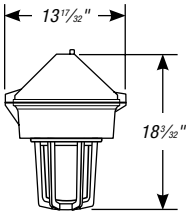

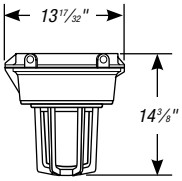

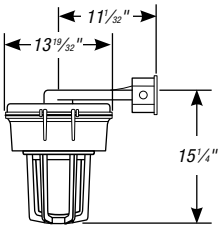

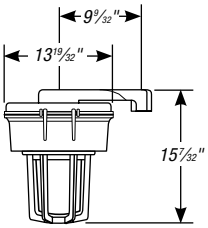

HazBatt® M5 Fixture Catalog Numbering System

XFE	26	PB	12	-	0	G	-	C2	D	Z
1	2	3	4		5	6		7	8	9

1 HazBatt® Type/Suitability
- **XFE =** Class I, Division 1, Groups C, D HazBatt® Emergency Lighting System

2 Total Lamp Watts
- **26 =** Two 13-Watt Fluorescent Lamps

3 Battery Ballast Circuit
- **B =** Emergency Operation HazBatt®: Two Emergency Ballasts Only
- **PB =** Continuous Operation HazBatt®: Two Emergency Ballasts plus Two AC Ballasts (120 volt only)

4 Voltage
- **12 =** 120 VAC Primary (Emergency or Continuous Operation)
- **27 =** 277 VAC Primary (Emergency Operation Only)

5 Housing
- **0 =** Standard Housing

6 Guards
- **G =** Guard

7 Mounting Style
- **B2 =** ¾" Wall
- **B3 =** 1" Wall
- **C2 =** ¾" Ceiling
- **C3 =** 1" Ceiling
- **J2 =** ¾" Bulkhead
- **J3 =** 1" Bulkhead
- **P2 =** ¾" Rigid Pendant
- **P3 =** 1" Rigid Pendant
- **S4 =** 1¼" Angle Stanchion
- **S5 =** 1½" Angle Stanchion

8 Packaging Options
- **D =** UNIPAK® Packaging (Completely Assembled with Lamps in One Carton)

9 Options
- **Z =** Shipped with Explosion-Proof Test Switch Station (Single Button)
- **7 =** Shipped with VRE22 Exit Sign (Not UL® Listed)

Class I — Division 1, Groups C, D
- UL844, UL924, UL1598
- Enclosed and Gasketed, Wet Locations
- Marine — Inside Drip Proof

Contact your Thomas & Betts sales representative to verify classification.

Thomas&Betts

United States
Tel: 901.252.8000
800.816.7809
Fax: 901.252.1354

Technical Services
Tel: 888.862.3289

www.tnb.com

Emergency Lighting — HazBatt® M5 Class I, Div 1

HazBatt® M5 Fluorescent Emergency Lighting Systems — Class I, Division 1

XFE26B12 Tank

XFE26B12 Fixture and Globe

	MOUNTING STYLE	SIZE IN	120 VAC EMERGENCY USE	120 VAC CONTINUOUS OPERATION	277 VAC EMERGENCY USE
	Pendant	¾ 1	XFE26B12-O-P2D XFE26B12-O-P3D	XFE26PB12-O-P2D XFE26PB12-O-P3D	XFE26B27-O-P2D XFE26B27-O-P3D
	Ceiling	¾ 1	XFE26B12-O-C2D XFE26B12-O-C3D	XFE26PB12-O-C2D XFE26PB12-O-C3D	XFE26B27-O-C2D XFE26B27-O-C3D
	Wall	¾ 1	XFE26B12-O-B2D XFE26B12-O-B3D	XFE26PB12-O-B2D XFE26PB12-O-B3D	XFE26B27-O-B2D XFE26B27-O-B3D
	Stanchion	1¼ 1½	XFE26B12-O-S4D XFE26B12-O-S5D	XFE26PB12-O-S4D XFE26PB12-O-S5D	XFE26B27-O-S4D XFE26B27-O-S5D
	Bulkhead	¾ 1	XFE26B12-O-J2D XFE26B12-O-J3D	XFE26PB12-O-J2D XFE26PB12-O-J3D	XFE26B27-O-J2D XFE26B27-O-J3D

HazBatt® M5 Fluorescent Emergency Lighting Systems — Class I, Division 1 with Exit Sign

	MOUNTING STYLE	SIZE IN	120 VAC EMERGENCY USE	120 VAC CONTINUOUS OPERATION	277 VAC EMERGENCY USE
	Pendant	¾ 1	XFE26B12-G-P27 XFE26B12-G-P37	XFE26PB12-G-P27 XFE26BP12-G-P37	XFE26B27-G-P27 XFE26B27-G-P37
	Ceiling	¾ 1	XFE26B12-G-C27 XFE26B12-G-C37	XFE26PB12-G-C27 XFE26PB12-G-C37	XFE26B27-G-C27 XFE26B27-G-C37
	Wall	¾ 1	XFE26B12-G-B27 XFE26B12-G-B37	XFE26PB12-G-B27 XFE26PB12-G-B37	XFE26B27-G-B27 XFE26B27-G-B37
	Stanchion	1¼ 1½	XFE26B12-G-S47 XFE26B12-G-S57	XFE26PB12-G-S47 XFE26PB12-G-S57	XFE26B27-G-S47 XFE26B27-G-S57
	Bulkhead	¾ 1	XFE26B12-G-J27 XFE26B12-G-J37	XFE26PB12-G-J27 XFE26PB12-G-J37	XFE26B27-G-J27 XFE26B27-G-J37

Class I — Division 1, Groups C, D
- UL844, UL924, UL1598
- Enclosed and Gasketed, Wet Locations
- Marine — Inside Drip Proof

Contact your Thomas & Betts sales representative to verify classification.

Emergency Lighting — HazBatt® M5 Class I, Div 1

Mounting Options

Pendant Mount

Ceiling Mount

Wall Mount

Stanchion Mount

Bulkhead Mount

CAT. NO.	DESCRIPTION	CONDUIT HUB SIZE
XP2-RED	Pendant Mount	¾"
XP3-RED		1"
XC2-RED	Ceiling Mount	¾"
XC3-RED		1"
XB2-RED	Wall Mount	¾"
XB3-RED		1"
XJ2-RED	Bulkhead Mount	¾"
XJ3-RED		1"
XS4-RED	Stanchion Mount	¾"
XS5-RED		1"

Replacement Globe Assembly

Globe Assembly

CAT. NO.	DESCRIPTION
XFE26B12	HazBatt® M5 Replacement Globe Assembly

Reflectors

Standard Dome

30° Angle Reflector

CAT. NO.	DESCRIPTION
VR15P	Dome Reflector, Fiberglass-Reinforced Polyester
VRA15P	30° Angle Reflector, Fiberglass-Reinforced Polyester

Guard

Cast Guard

CAT. NO.	DESCRIPTION
XGU15P-RED	Cast Aluminum Guard, Powder Finish

United States
Tel: 901.252.8000
800.816.7809
Fax: 901.252.1354

Technical Services
Tel: 888.862.3289

www.tnb.com

Emergency Lighting — HazFlash® M4 (Strobe) Class I, Div 2

HazFlash® M4 DXS Series Fixture Catalog Numbering System

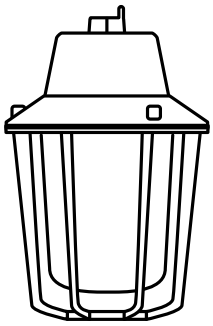

DXS	6	1	R	TG	-	P2	SR
1	2	3	4	5		6	7

1 Strobe Series and Suitability

DXS = HazFlash® M4 Xenon Strobe
Class I, Division 2, Groups A, B, C, D
Class II, Division 1, Groups E, F, G†
†Class II: Pendant-Mount Strobes Only

2 Flash Rate

6 = 60 Flashes per Minute

3 Voltage

1 = 120 Volts AC, 50/60 Hz (Standard)
2 = 240 Volts AC, 50/60 Hz
8 = 10–30 Volts DC
9 = 90–130 Volts DC

4 Lens Color

R = Red
B = Blue
C = Clear
G = Green
A = Amber

5 Optical Assembly Options

TG = Tempered Glass Globe
TGP = Tempered Globe and Polymeric Guard

6 Mounting Style

P2 = ¾" Pendant Mount
C2 = ¾" Ceiling Mount
B2 = ¾" Wall Mount with Box
S4 = 1¼" Angle Stanchion Mount

7 Options

SR = Sealing Ring Kit for Inverted Mounting (Maintains Marine Listing in Globe-Up Position)

‡ Sealing Ring Option required when mounting in globe-up position.

† Pendant Mount only.

Class I — Division 2, Groups A, B, C, D
Class II — Division 1, Groups E, F, G†
- CSA — NRTL/C
- Outdoor Wet Locations, NEMA 3R
- Outdoor Marine‡, NEMA 4X‡

Contact your Thomas & Betts sales representative to verify classification.

Emergency Lighting — HazFlash® M4 (Strobe) Class I, Div 2

HazFlash® M4 DXS Series Hazardous Area Strobe Lights

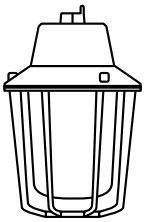

MOUNTING STYLE	CONDUIT SIZE	120 VAC, 50/60 HZ CAT. NO.	240 VAC, 50/60 HZ CAT. NO.	10–30 VDC CAT. NO.	90–130 VDC CAT. NO.
RED Lens HazFlash® M4 DXS Strobe Lights					
Pendant	¾"	**DXS61R-TGP-P2**	**DSX62R-TGP-P2**	**DXS68R-TGP-P2**	**DXS69R-TGP-P2**
Ceiling	¾"	**DXS61R-TGP-C2**	**DXS62R-TGP-C2**	**DXS68R-TGP-C2**	**DXS69R-TGP-C2**
Wall	¾"	**DXS61R-TGP-B2**	**DXS62R-TGP-B2**	**DXS68R-TGP-B2**	**DXS69R-TGP-B2**
Stanchion	1¼"	**DXS61R-TGP-S4**	**DXS62R-TGP-S4**	**DXS68R-TGP-S4**	**DXS69R-TGP-S4**
BLUE Lens HazFlash® M4 DXS Strobe Lights					
Pendant	¾"	**DXS61B-TGP-P2**	**DSX62B-TGP-P2**	**DXS68B-TGP-P2**	**DXS69B-TGP-P2**
Ceiling	¾"	**DXS61B-TGP-C2**	**DXS62B-TGP-C2**	**DXS68B-TGP-C2**	**DXS69B-TGP-C2**
Wall	¾"	**DXS61B-TGP-B2**	**DXS62B-TGP-B2**	**DXS68B-TGP-B2**	**DXS69B-TGP-B2**
Stanchion	1¼"	**DXS61B-TGP-S4**	**DXS62B-TGP-S4**	**DXS68B-TGP-S4**	**DXS69B-TGP-S4**
CLEAR Lens HazFlash® M4 DXS Strobe Lights					
Pendant	¾"	**DXS61C-TGP-P2**	**DSX62C-TGP-P2**	**DXS68C-TGP-P2**	**DXS69C-TGP-P2**
Ceiling	¾"	**DXS61C-TGP-C2**	**DXS62C-TGP-C2**	**DXS68C-TGP-C2**	**DXS69C-TGP-C2**
Wall	¾"	**DXS61C-TGP-B2**	**DXS62C-TGP-B2**	**DXS68C-TGP-B2**	**DXS69C-TGP-B2**
Stanchion	1¼"	**DXS61C-TGP-S4**	**DXS62C-TGP-S4**	**DXS68C-TGP-S4**	**DXS69C-TGP-S4**
GREEN Lens HazFlash® M4 DXS Strobe Lights					
Pendant	¾"	**DXS61G-TGP-P2**	**DSX62G-TGP-P2**	**DXS68G-TGP-P2**	**DXS69G-TGP-P2**
Ceiling	¾"	**DXS61G-TGP-C2**	**DXS62G-TGP-C2**	**DXS68G-TGP-C2**	**DXS69G-TGP-C2**
Wall	¾"	**DXS61G-TGP-B2**	**DXS62G-TGP-B2**	**DXS68G-TGP-B2**	**DXS69G-TGP-B2**
Stanchion	1¼"	**DXS61G-TGP-S4**	**DXS62G-TGP-S4**	**DXS68G-TGP-S4**	**DXS69G-TGP-S4**
AMBER Lens HazFlash® M4 DXS Strobe Lights					
Pendant	¾"	**DXS61A-TGP-P2**	**DSX62A-TGP-P2**	**DXS68A-TGP-P2**	**DXS69A-TGP-P2**
Ceiling	¾"	**DXS61A-TGP-C2**	**DXS62A-TGP-C2**	**DXS68A-TGP-C2**	**DXS69A-TGP-C2**
Wall	¾"	**DXS61A-TGP-B2**	**DXS62A-TGP-B2**	**DXS68A-TGP-B2**	**DXS69A-TGP-B2**
Stanchion	1¼"	**DXS61A-TGP-S4**	**DXS62A-TGP-S4**	**DXS68A-TGP-S4**	**DXS69A-TGP-S4**

Notes:

† Use pendant mount strobes only for Class II locations.

‡ Use sealing ring kit (below) to maintain Outdoor Marine and NEMA 4X ratings when installing in the inverted position.

To order DXS strobe light with sealing ring kit for inverted mounting (globe pointing up), add suffix "-SR" to the catalog number. Example: DXS61RGP-P2-SR.

DXS Strobe Light Replacement Parts

CAT. NO.	DESCRIPTION
XSFT	Replacement Flash Tube
XSFL-R	Replacement Fresnel Lens — Red
XSFL-B	Replacement Fresnel Lens — Blue
XSFL-C	Replacement Fresnel Lens — Clear
XSFL-G	Replacement Fresnel Lens — Green
XSFL-A	Replacement Fresnel Lens — Amber
VGU22P	Replacement Polycarbonate Guard
VGL22	Clear Glass Globe
VGT22	Tempered Glass Globe
SRKIT-1	Sealing Ring Kit — includes sealing ring and gasket

Class I — Division 2, Groups A, B, C, D
Class II — Division 1, Groups E, F, G†

- CSA — NRTL
- Outdoor Wet Locations, NEMA 3R
- Outdoor Marine‡, NEMA 4X‡

Contact your Thomas & Betts sales representative to verify classification.

Thomas&Betts

United States
Tel: 901.252.8000
800.816.7809
Fax: 901.252.1354

Technical Services
Tel: 888.862.3289

www.tnb.com

Emergency Lighting — HazFlash® M5 (Strobe) Class I, Div 1

HazFlash® M5 XXS Series Fixture Catalog Numbering System

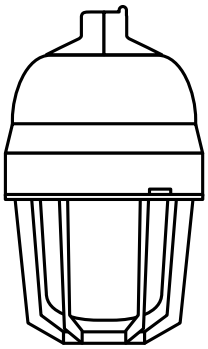

XXS	6	1	R	-	G	-	P2	SR
1	2	3	4		5		6	7

1 Strobe Series and Suitability

XXS = HazFlash® M5 Xenon Strobe
Class I, Division 1, Groups C, D
Class II, Division 1, Groups E, F, G

2 Flash Rate

6 = 60 Flashes per Minute
4 = 40 Flashes per Minute (Standard)
8 = 80 Flashes per Minute

3 Electrical Ratings

1 = 120 Volts AC, 50/60 Hz (Standard)
2 = 240 Volts AC, 50/60 Hz
8 = 10–30 Volts DC
9 = 90–130 Volts DC

4 Lens Color

R = Red
B = Blue
C = Clear
G = Green
A = Amber

5 Guard

G = Cast Guard
(Omit "G" if guard is not required.)

6 Mounting Style

P2 = ¾" Pendant Mount
P3 = 1" Pendant Mount
C2 = ¾" Ceiling Mount
C3 = 1" Ceiling Mount
B2 = ¾" Wall Mount with Box
B3 = 1" Wall Mount with Box
J2 = ¾" Bulkhead Mount
J3 = 1" Bulkhead Mount
S4 = 1¼" Angle Stanchion Mount
S5 = 1½" Angle Stanchion Mount

Class I — Class I, Division 1, Groups C, D
Class II — Class II, Division 1, Groups E, F, G
- Outdoor Wet Locations‡, NEMA 4X
- UL864, UL1598, UL844

Contact your Thomas & Betts sales representative to verify classification.
‡ Pendant mount only

Emergency Lighting — HazFlash® M5 (Strobe) Class I, Div 1

HazFlash® M5 XXS Series Explosion-Proof Strobe Lights

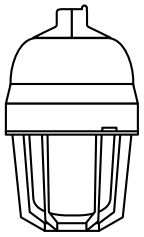

MOUNTING STYLE	CONDUIT SIZE	120 VAC, 50/60 HZ CAT. NO.	240 VAC, 50/60 HZ CAT. NO.	10–30 VDC CAT. NO.	90–130 VDC CAT. NO.
RED Lens HazFlash® M5 XXS Strobe Lights					
Pendant	¾"	**XXS61R-G-P2**	**XSX62R-G-P2**	**XXS68R-G-P2**	**XXS69R-G-P2**
Ceiling	¾"	**XXS61R-G-C2**	**XXS62R-G-C2**	**XXS68R-G-C2**	**XXS69R-G-C2**
Wall	¾"	**XXS61R-G-B2**	**XXS62R-G-B2**	**XXS68R-G-B2**	**XXS69R-G-B2**
Stanchion	1¼"	**XXS61R-G-S4**	**XXS62R-G-S4**	**XXS68R-G-S4**	**XXS69R-G-S4**
BLUE Lens HazFlash® M5 XXS Strobe Lights					
Pendant	¾"	**XXS61B-G-P2**	**XSX62B-G-P2**	**XXS68B-G-P2**	**XXS69B-G-P2**
Ceiling	¾"	**XXS61B-G-C2**	**XXS62B-G-C2**	**XXS68B-G-C2**	**XXS69B-G-C2**
Wall	¾"	**XXS61B-G-B2**	**XXS62B-G-B2**	**XXS68B-G-B2**	**XXS69B-G-B2**
Stanchion	1¼"	**XXS61B-G-S4**	**XXS62B-G-S4**	**XXS68B-G-S4**	**XXS69B-G-S4**
CLEAR Lens HazFlash® M5 XXS Strobe Lights					
Pendant	¾"	**DXS61C-G-P2**	**DSX62C-G-P2**	**DXS68C-G-P2**	**DXS69C-G-P2**
Ceiling	¾"	**DXS61C-G-C2**	**DXS62C-G-C2**	**DXS68C-G-C2**	**DXS69C-G-C2**
Wall	¾"	**DXS61C-G-B2**	**DXS62C-G-B2**	**DXS68C-G-B2**	**DXS69C-G-B2**
Stanchion	1¼"	**DXS61C-G-S4**	**DXS62C-G-S4**	**DXS68C-G-S4**	**DXS69C-G-S4**
GREEN Lens HazFlash® M5 XXS Strobe Lights					
Pendant	¾"	**XXS61G-G-P2**	**XSX62G-G-P2**	**XXS68G-G-P2**	**XXS69G-G-P2**
Ceiling	¾"	**XXS61G-G-C2**	**XXS62G-G-C2**	**XXS68G-G-C2**	**XXS69G-G-C2**
Wall	¾"	**XXS61G-G-B2**	**XXS62G-G-B2**	**XXS68G-G-B2**	**XXS69G-G-B2**
Stanchion	1¼"	**XXS61G-G-S4**	**XXS62G-G-S4**	**XXS68G-G-S4**	**XXS69G-G-S4**
AMBER Lens HazFlash® M5 XXS Strobe Lights					
Pendant	¾"	**XXS61A-G-P2**	**XSX62A-G-P2**	**XXS68A-G-P2**	**XXS69A-G-P2**
Ceiling	¾"	**XXS61A-G-C2**	**XXS62A-G-C2**	**XXS68A-G-C2**	**XXS69A-G-C2**
Wall	¾"	**XXS61A-G-B2**	**XXS62A-G-B2**	**XXS68A-G-B2**	**XXS69A-G-B2**
Stanchion	1¼"	**XXS61A-G-S4**	**XXS62A-G-S4**	**XXS68A-G-S4**	**XXS69A-G-S4**

Note:

To order XXS strobe light with sealing ring kit for inverted mounting (globe pointing up), add suffix "-SR" to the catalog number. Example: XXS61RGP-P2-SR.

XXS Strobe Light Replacement Parts

CAT. NO.	DESCRIPTION
XSFT	Replacement Flash Tube
XSFL-R	Replacement Fresnel Lens — Red
XSFL-B	Replacement Fresnel Lens — Blue
XSFL-C	Replacement Fresnel Lens — Clear
XSFL-G	Replacement Fresnel Lens — Green
XSFL-A	Replacement Fresnel Lens — Amber
XGU15	Replacement Guard
XGSA15	Replacement Globe Assembly

Class I — Division 2, Groups C, D
Class II — Division 1, Groups E, F, G

- CSA — NRTL
- Outdoor Wet Locations, NEMA 3R
- UL864, UL1598, UL844

Contact your Thomas & Betts sales representative to verify classification.

Thomas&Betts

United States
Tel: 901.252.8000
800.816.7809
Fax: 901.252.1354

Technical Services
Tel: 888.862.3289

www.tnb.com