Assembly Instructions for cable gland: PSG 553/RAC Exd IIC Gb, Exe IIC Gb, Extb IIIC Db

HAWKE International

AI 312 / Issue P - 07/12

Operating temperature range -60°C +80°C

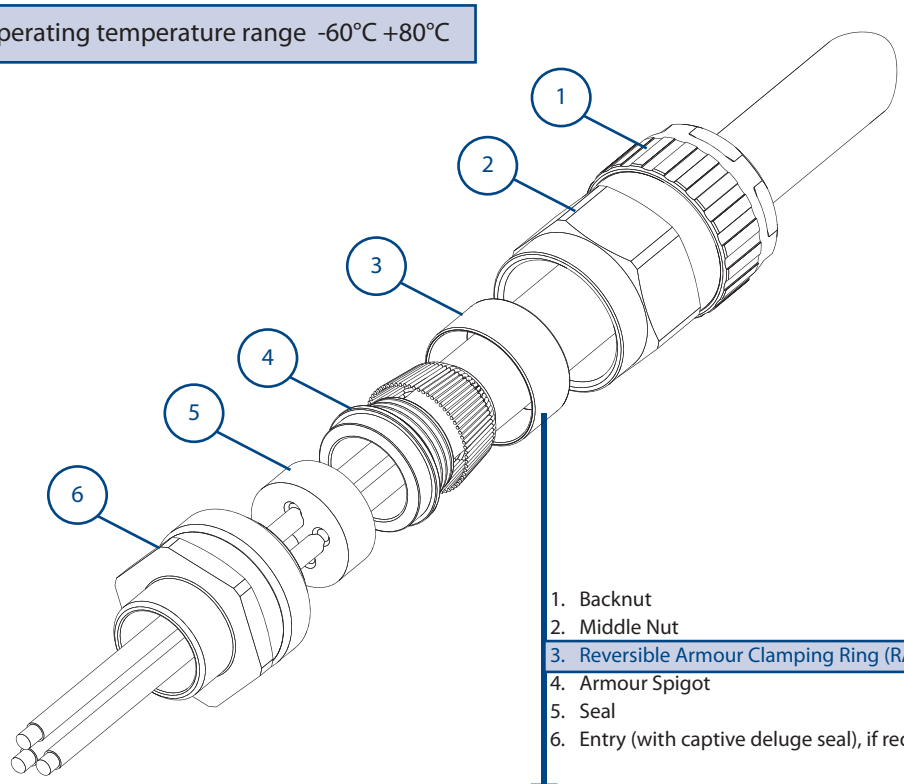

1. Backnut
2. Middle Nut
3. Reversible Armour Clamping Ring (RAC)
4. Armour Spigot
5. Seal
6. Entry (with captive deluge seal), if required

Certification Details

Gland Type: PSG 553/RAC Exd IIC Gb, Exe II Gb, Extb IIIC Db
Baseefa06ATEX0056X Ex II 2 GD IP66 CE
IECEx BAS06.0013X
GOST R No: РОСС GB.ГБ05.B03785
CNEx07.0897X

Reversible Armour Clamping Ring (RAC)

General identification ring orientation for:

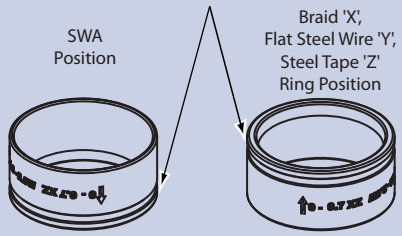

IMPORTANT: The arrowhead indicating the correct armour thickness or type should point towards the equipment

Cable Preparation

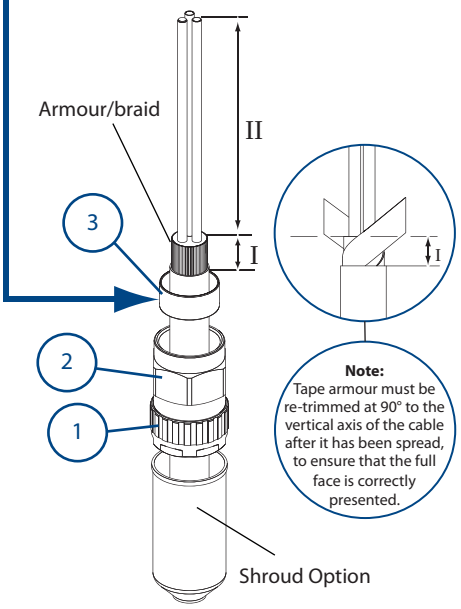

Gland Preparation

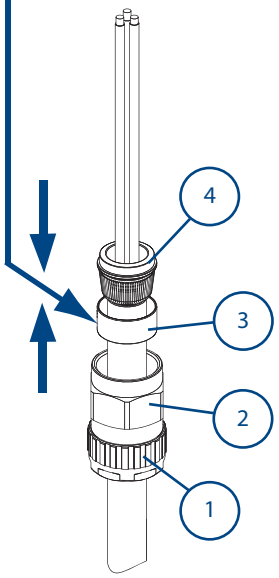

Note: Cable acceptance sizes are marked on the diaphragm seal, clamping ring and backnut.

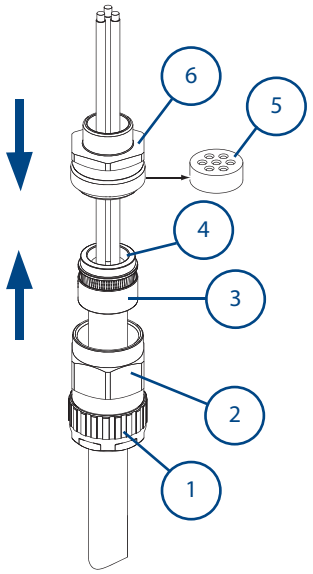

A
Strip Cable to suit equipment as shown above and expose the armour/braid 'I' removing all cable fillers.
'I' = 20mm for cable gland sizes Os to C
'I' = 25mm for cable gland sizes C2 to F
'II' = to suit equipment.
If required, fit shroud.

B
Push the cable through the armour spigot ④. Spread armour/braid over the armour spigot ④ until the end of the armour/braid is up against the shoulder of the armour cone. Position the armour clamping ring ③.

C
Remove the inner seal ⑤ from the entry ⑥. Place the entry ⑥ over the armour spigot ④. Move the sub-assembly ① and ② up to meet the entry ⑥.

Hawke International is a division of Hubbell Ltd.
Registered No. 669157 in England. Registered Office:
Mitre House, 160 Aldersgate Street, London EC1A 4DD.
A member of the Hubbell Group of Companies

UK Office
Oxford Street West,
Ashton-Under-Lyne,
Lancashire. OL7 0NA. UK

Sales: +44 (0) 161 830 6698
Technical: +44 (0) 161 830 6697
Fax: +44 (0) 161 830 6648
E-mail: sales@ehawke.com

EC Declaration of Conformity for PSG 553/RAC Gland
We hereby declare that the products supplied on this order comply with the requirements of the ATEX Directive 94/9/EC and have been type approved by Notified Body Baseefa Limited, Buxton. SK17 9RZ UK. 1180. The products included on this Declaration of Conformity have been designed and manufactured in compliance with the following international standards:
EN 60079-0 : 2009, EN 60079-1 : 2007, EN 60079-7: 2007, EN60079-31:2009

P O'Connor - Head of Development/Technical

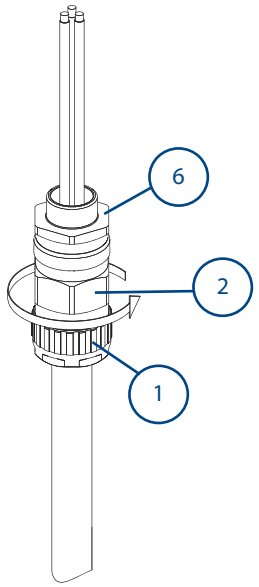

D

Hold the entry ⑥ in position with a spanner/wrench to prevent rotation. Hand tighten the middle nut ② to the entry ⑥ and turn a further ½ to ¾ of a turn with a spanner/wrench.

IMPORTANT: *Support the cable to prevent it from twisting.*

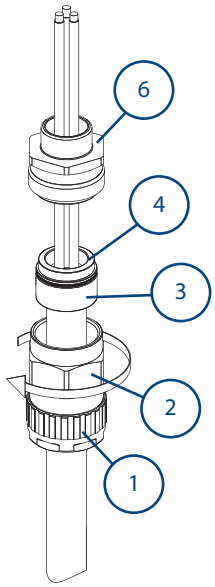

E

Unscrew the middle nut ② and visually inspect that the armour/braid has been successfully clamped between the armour spigot ④ and the armour clamping ring ③. If armour/braid not clamped, repeat assembly.

Note : *If the equipment has a threaded entry, it may be advisable to screw the cable gland into the equipment to prevent twisting of the cable after Step E*

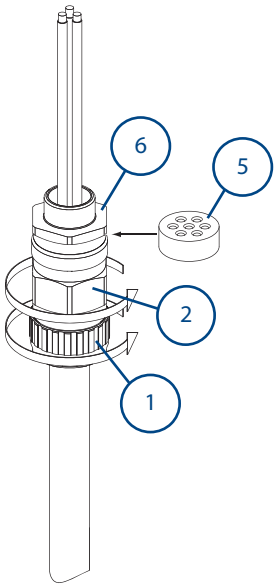

F

Select the correct punch tool to suit the conductors sizes (see table) and cut out the required number of holes in the seal ⑤ using the indented positions as a guide. Remove the entry ⑥ and pass the individual conductors through the appropriately sized punched holes in the seal ⑤ ensuring they are not twisted or kinked, and slide the seal ⑤ down to the spigot ④.
Replace entry ⑥ and re-assemble middle nut ② onto the entry component ⑥.
Tighten up the middle nut ② until hand tight, then using a wrench/spanner turn the nut through a minimum of one full turn.
Hand tighten the backnut ① to form a seal around the cable, then tighten a further full turn using a wrench/spanner. Ensure that the middle nut ② does not rotate when tightening the backnut ①. Ensure that the deluge seal is pulled down into position, if fitted.
Locate the shroud over the cable gland, if applicable.

CABLE GLAND SELECTION TABLE

Size Ref.	Male Entry Thread Size		Outer Sheath		Steel Wire Armour/ Tape/Braid		Compressed Length	Maximum Length	Hexagon Dimensions	
	Metric	NPT	Min.	Max.	Orientation 1	Orientation 2			Across Flats	Across Corners
A	M20	½" - ¾"	12.5	20.5	0.8/1.25	0/0.8	53.0	80	30.0	32.5
B	M25	¾" - 1"	16.9	26.0	1.25/1.6	0/0.7	69.5	88	36.0	39.5
C	M32	1" - 1¼"	22.0	33.0	1.6/2.0	0/0.7	64.0	95	46.0	50.5

CABLE GLAND SIZE FOR CONDUCTOR

Maximum No. of Cores	Cores Cross Sectional Area mm²				
	1.5	2.5	4.0	6.0	10.0
7	A & B	A & B	B & C	C	C
4	---	---	---	B	---
3	---	---	---	---	B

PUNCH TOOL SIZE DETAILS

Punch Ref.	No.1	No.2	No.3
Core C.S.A. mm²	1.5 - 2.5	4.0 - 6.0	10.0

SCHEDULE OF LIMITATIONS:

1. The cable glands when used with braided cable types are only suitable for use with fixed apparatus, the cable for which must be effectively clamped and cleated elsewhere.
2. This cable gland has an operating temperature range of -60°C to +80°C.
3. A seal must be formed between the equipment and the cable gland to maintain the appropriate degree of protection against ingress of dust, solid objects and water.

ACCESSORIES:

Before cable gland assembly or stripping of the cable gland assembly, consideration should be given to any cable gland accessories that may be required, such as: -

- Shroud, to offer additional corrosion protection.
- Locknut, to secure cable glands into position.
- Sealing washer, to offer additional ingress protection of the enclosure at the cable gland entry.
- Earthtag, to provide an external armour/braid bonding point.
- Serrated washer, to dampen any vibrations that may loosen the locknut or cable gland assembly.